TRITON

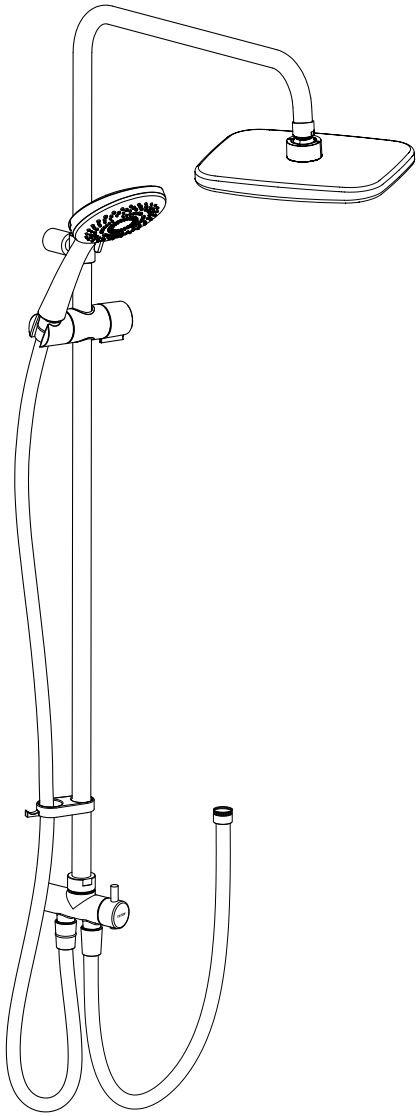

ENlight® DuElec®

Dual Outlet Diverter Kit

IMPORTANT SAFETY ADVICE

The shower heads and hoses supplied with this product are a safety critical part of your shower system. Failure to use genuine Triton parts may cause injury and invalidate your guarantee.

INSTALLATION AND OPERATING INSTRUCTIONS

Please read this book thoroughly and familiarise yourself with all instructions before commencing installation.

Keep these instructions in a safe place for future reference.

2181742A - January 2026

MAIN COMPONENTS

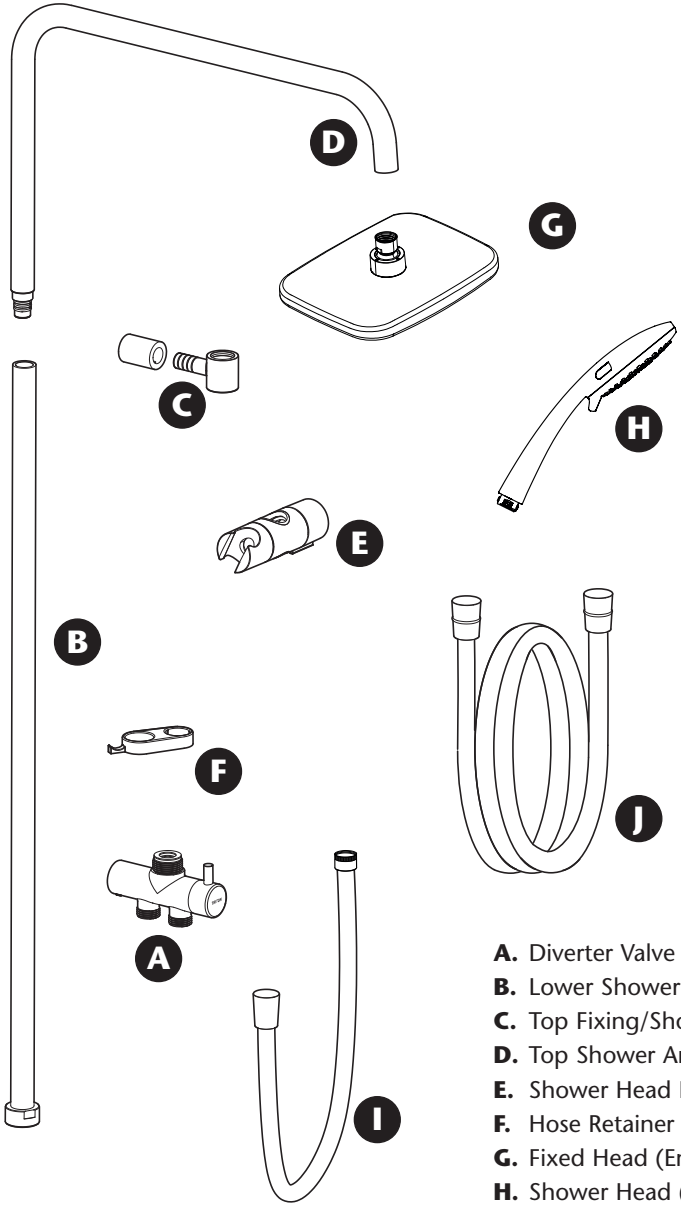

A. Diverter Valve
B. Lower Shower Arm
C. Top Fixing/Shower Arm Holder
D. Top Shower Arm
E. Shower Head Holder
F. Hose Retainer
G. Fixed Head (Enya)
H. Shower Head (Enya)
I. Hose (Short)
J. Hose (long)

DIMENSIONS

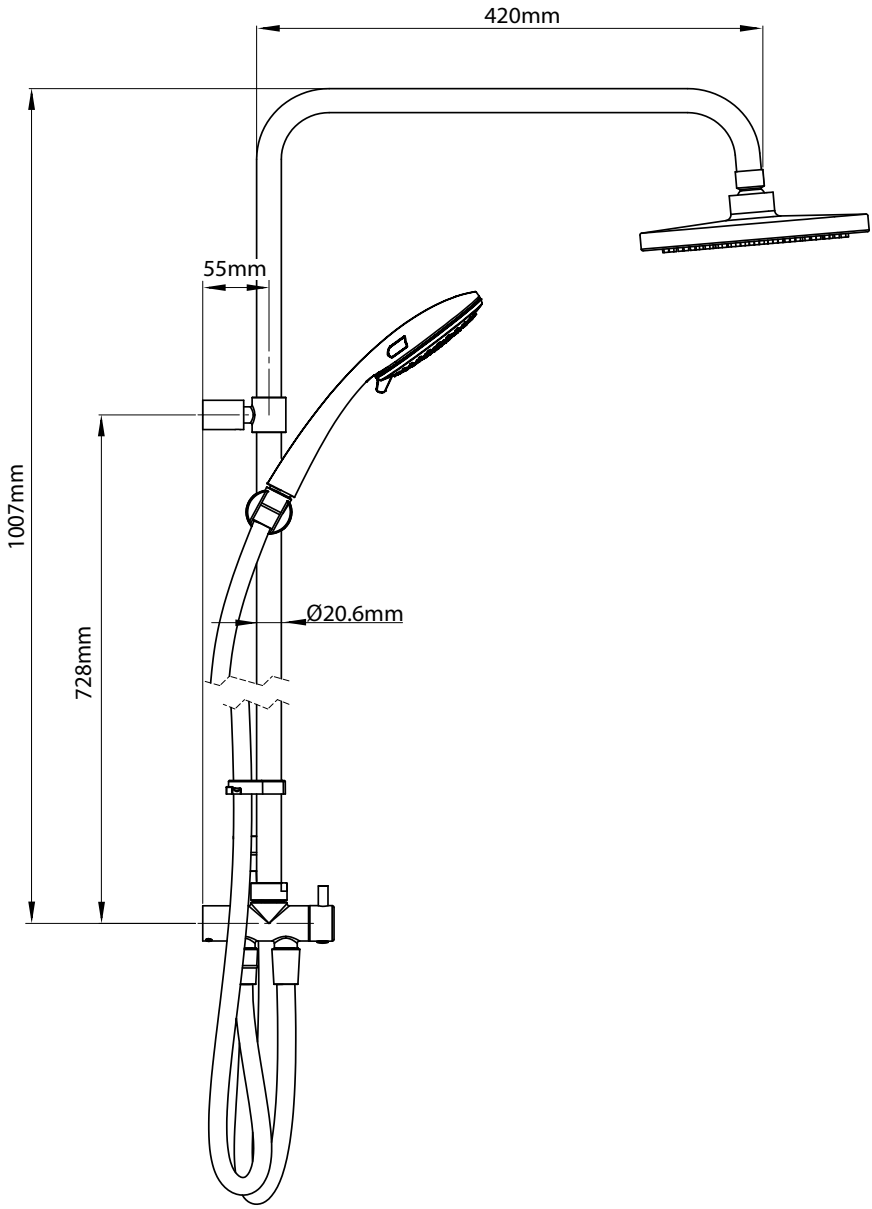

All dimensions are approximate.

INSTALLATION

POSITIONING THE DUAL OUTLET DIVERTER

Ensure that the **Diverter Valve** is mounted within 350mm radius of the shower outlet, this will ensure the **Short Shower Hose** provided is able to connect the electric shower without strains or kinks.

When fitting the **Diverter** to a pumped electric shower, ensure that the **Top Shower Arm** is NOT more than 750mm from the top of the shower unit.

The **Shower Head Holder** can be orientated such that the **Shower Head** can be positioned either side of the Shower Arm.

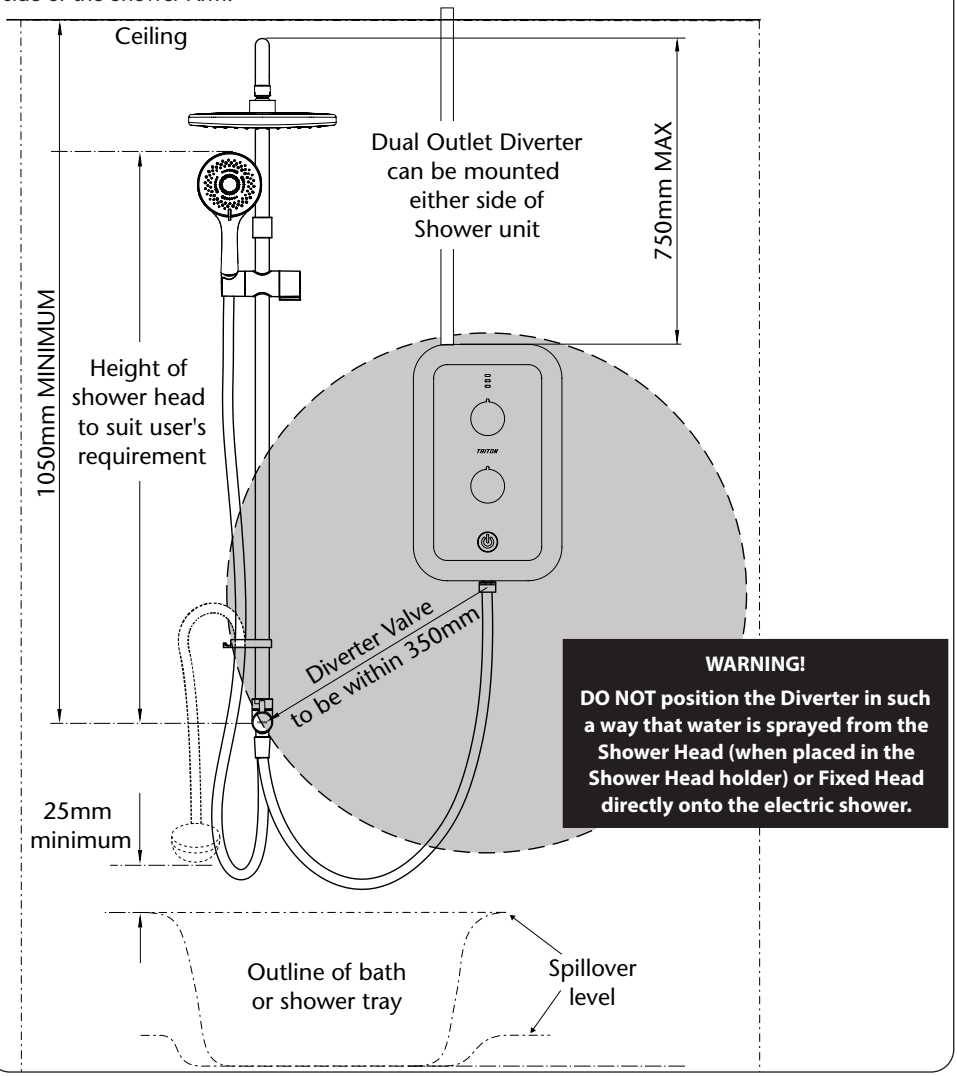

WARNING!

DO NOT position the Diverter in such a way that water is sprayed from the Shower Head (when placed in the Shower Head holder) or Fixed Head directly onto the electric shower.

INSTALLATION

Step 1

Always check there are no hidden cables or pipes before drilling holes for wall plugging.
Use great care when using power tools near water.

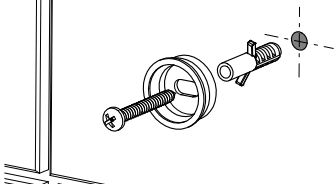

Referring to ***Positioning the Dual Outlet Diverter*** guidance, mark the wall fixing position for the **Diverter Fixing Bracket** and drill and plug the wall. Ideally the hole should be positioned in the centre of a tile and not in the grouting.

Remove the **Diverter Fixing Bracket** from the **Diverter Valve** and secure it to the wall using the fixing screw.

Step 2

Measure a distance of 728mm from the **Diverter Bracket**, ensuring centres are vertically aligned, and mark the position. Drill and plug the wall. Secure the **Shower Arm Fixing Bracket** to the wall using the fixing screw.

Ensure the **Grub Screw** is pointing downwards.

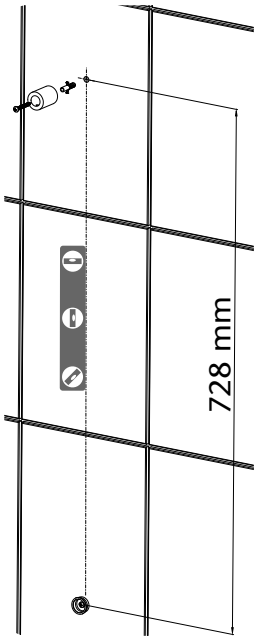

Step 3

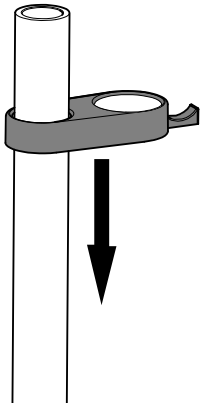

Assemble the **Hose Retainer** onto the **Lower Shower Arm.**

Step 4

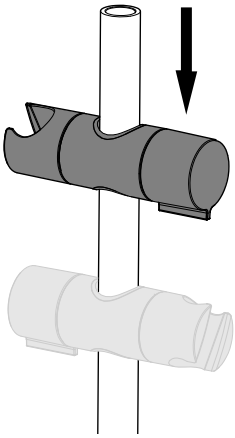

Assemble the **Shower Head Holder** onto the **Lower Shower Arm.**

Note: The **Shower Head Holder** can be orientated such that the **Shower Head** can be positioned either side of the **Shower Arm**.

INSTALLATION

Step 5

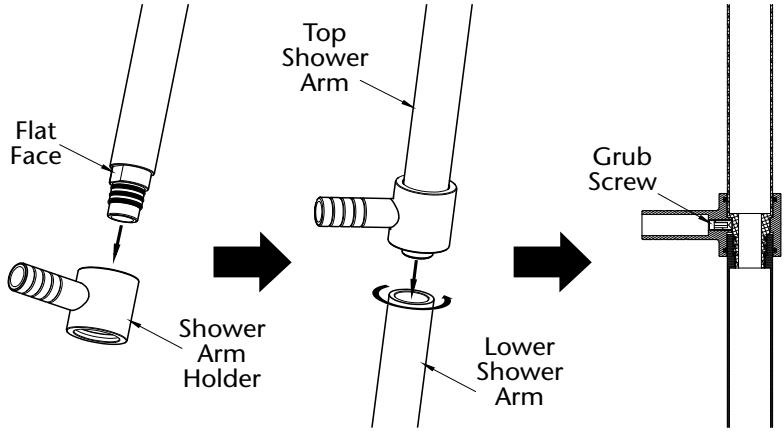

Assemble the **Top Shower Arm** into the **Shower Arm Holder**, note that the **Top Shower Arm** can only be assembled one way, so ensure that the flat faces of **Top Shower Arm** and **Shower Arm Holder** are aligned.

Assemble the **Lower Shower Arm** to **Top Shower Arm** by rotating the **Lower Shower Arm** on to the threaded spigot. Hand tight will be sufficient to seal the two together.

Finally tighten the **Grub Screw** (located inside the bore of the Shower Arm Holder) to lock the **Top Shower Arm** to **Shower Arm Holder**.

Step 6

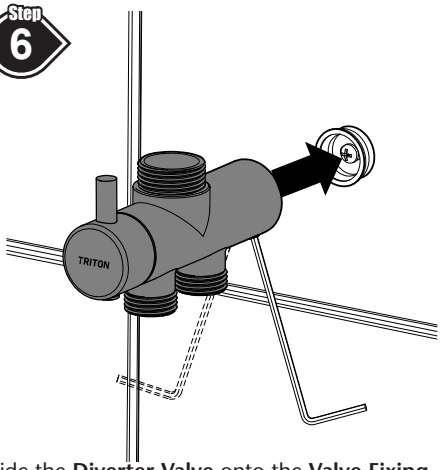

Slide the **Diverter Valve** onto the **Valve Fixing Bracket** and tighten the 2 x **Grub Screws** on the underside of the **Diverter Valve**.

Note: Do not fully tighten the screws as some adjustment of the valve will be necessary when assembling the **Shower Arms**.

Step 7

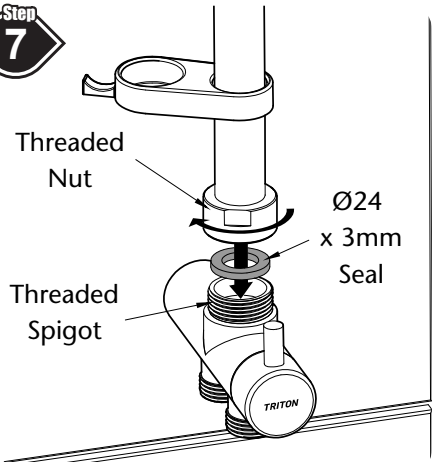

Position the Ø24 x 3mm rubber seal on top of the threaded **Diverter Valve** spigot.

Loosely tighten the threaded nut of the **Lower Shower Arm** onto the **Diverter Valve**.

DO NOT fully tighten the threaded nut at this stage.

INSTALLATION

Step 8

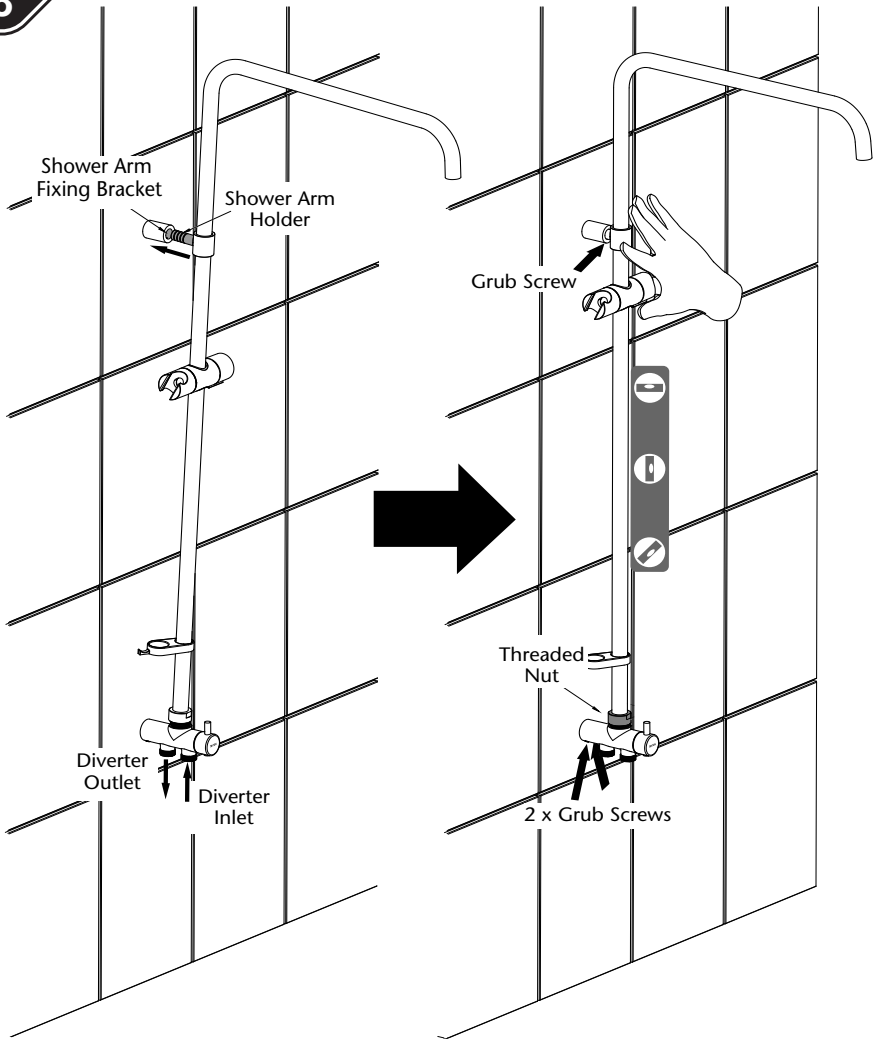

Pivoting the **Shower Arm** slightly away from the wall, slide the stem of the **Shower Arm Holder** into the **Shower Arm Fixing Bracket**.

Holding the **Shower Arms** in place, fully tighten the **Threaded Nut** on the **Diverter Valve**, ensuring that the **Shower Arm**s are vertical.

Fully tighten the **Grub screw** in the **Shower Arm Fixing Bracket**, and the 2 x **Grub Screws** on the underside of the **Diverter Valve**.

INSTALLATION

Step 9

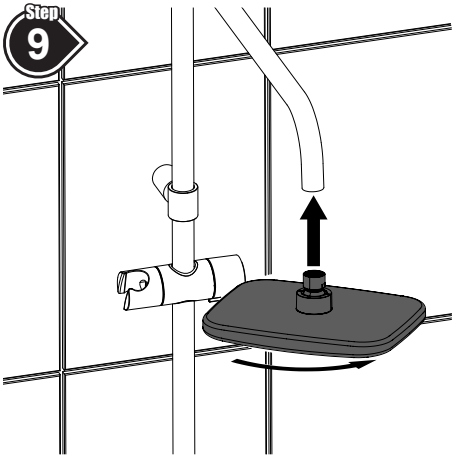

Assemble the **Fixed Head** on to the **Top Shower Arm**.

Step 11

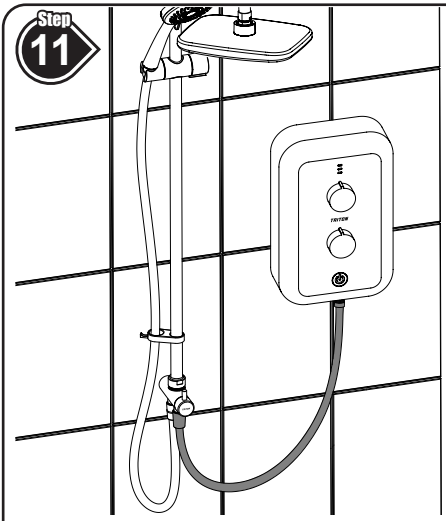

Take the **Short Hose** and fit a hose seal into each end. Attach the conical nut to the inlet at the front of the **Diverter Valve** and attach the other end to the shower unit outlet.

Step 10

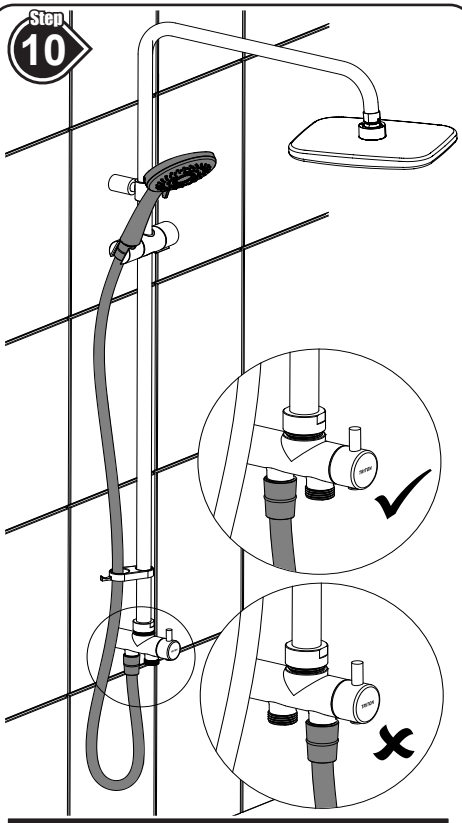

IMPORTANT

Ensure the **Shower Head Hose** is connected to the outlet (back) **Diverter Valve** connector, failure to do this may cause damage to your shower.

Feed the Triton **Long Shower Hose** through the **Hose Retainer**, fit a hose seal into the conical nut and connect to the outlet of the **Diverter Valve**. At the other end of the hose, fit a hose seal into the conical nut and connect to the **Shower Head.**

Place **Shower Head** into the **Shower Head Holder**.

IMPORTANT - Before using the Diverter and Fittings, commission the shower as detailed in the Shower Instructions.

OPERATION

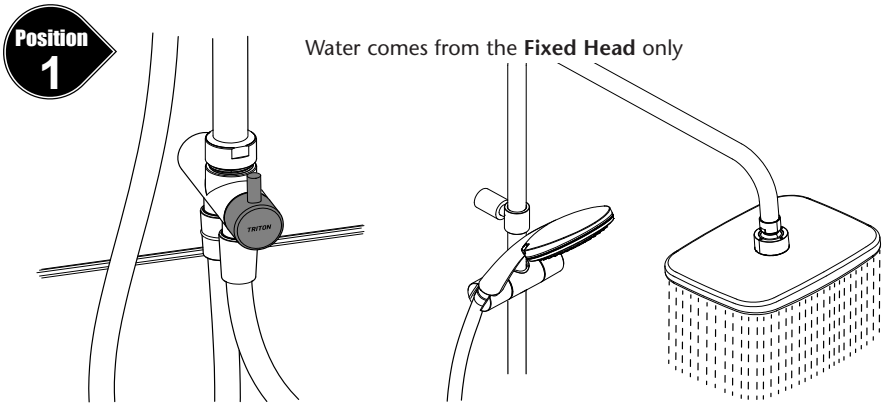

Water comes from the **Fixed Head** only

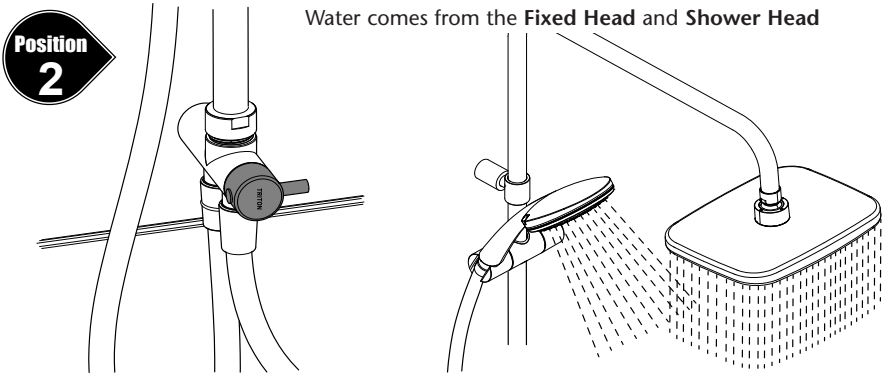

Water comes from the **Fixed Head** and **Shower Head**

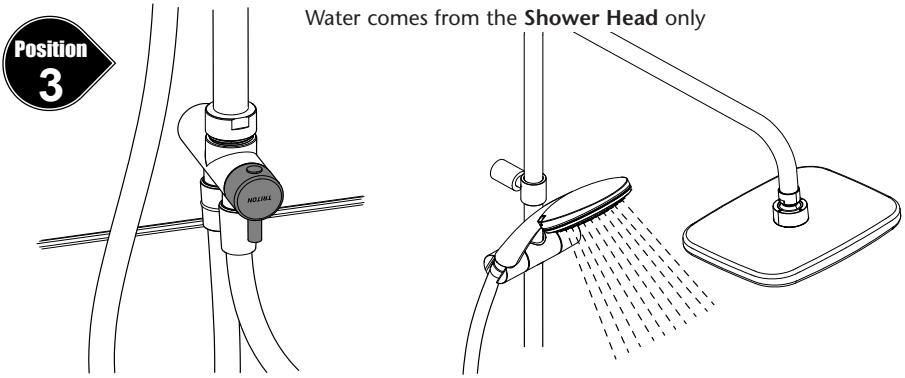

Water comes from the **Shower Head** only

CLEANING

CLEANING THE SHOWER HEAD AND FIXED HEAD

It is important to keep your shower head and fixed head clean to maintain the performance of your shower.

Triton recommends that all products are cleaned using warm, soapy water.

DO NOT use abrasive or aggressive chemical cleaning products as this may affect the product surface and finish and invalidate your guarantee.

Both the shower head and fixed head can be cleaned quickly by simply rubbing your fingers over the spray plate. **DO NOT** use a pin or similar to poke the holes otherwise the efficiency of the shower spray will be impaired.

The hardness of the water will determine the frequency of cleaning. For example, if the shower is used every day in a very hard water area, it may be necessary to clean the shower head on a weekly basis.

INSPECTING THE HOSES

Your shower hoses should be inspected from time to time for signs of damage or internal collapse.

Internal collapse can restrict the flow rate from the shower head and may cause damage to the shower.

Triton recommends use of a Triton branded anti-twist hose on all showers to ensure continuous safe performance.

To inspect your hose:

1. Unscrew the hose from the shower head and the diverter outlet.
2. Inspect the hose for damage, internal kinks, etc.
3. If necessary, replace the hose.

Triton Showers
Triton Road
Nuneaton
Warwickshire CV11 4NR

Triton is a division of Norcros Group (Holdings) Limited

Customer Experience: 024 7637 2222
Trade Installer Hotline: 024 7637 8344
www.tritonshowers.co.uk
E-mail: CXsupport@tritonshowers.co.uk
E-mail: technical@tritonshowers.co.uk

Please refer to shower installation and operating instructions for service details

TRITON reserve the right to change product speci ication without prior notice. E&OE. © TRITON SHOWERS 2026