RICHMOND PLUS

Towelrads

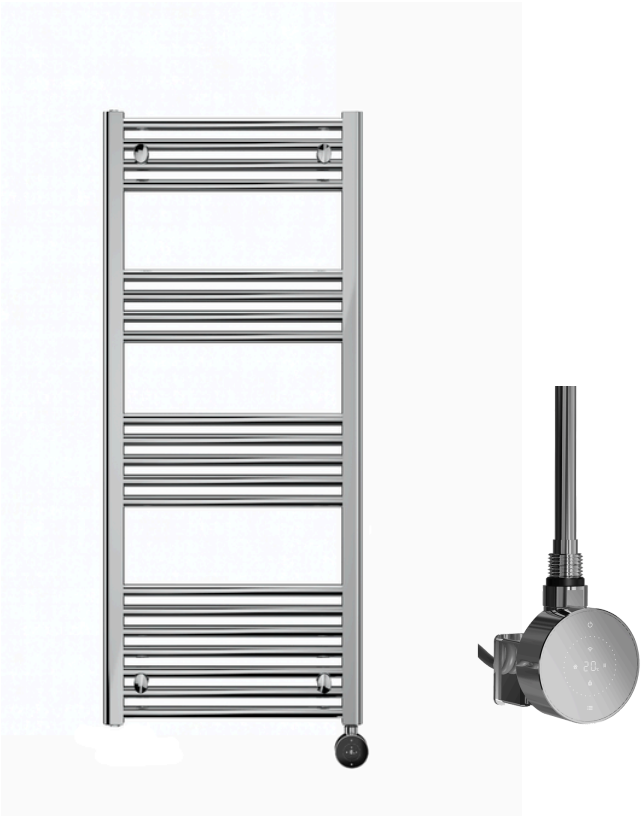

TECHNICAL DATA

Product Category

Electric Towel Rails

Product Overview

Designed for everyday comfort, the Richmond Plus delivers efficient warmth thanks to its 22mm bars and integrated smart heating element.

Available in chrome

2 YEAR 2-year guarantee

Available in a variety of sizes

Features & Benefits

- IPX4 rated safe in zones 2 and 3
- 24/7 programming
- APP programmable
- 5-year manufacturer's warranty on the radiator body
- Low Surface Temperature (LST) mode limits the towel rail to a constant 43°C for added safety

Product Information

FINISH	CODE	HEIGHT	WIDTH	DEPTH	WATTS OUTPUT - T50
Chrome	136300	800mm	500mm	78mm	200W
Chrome	136301	800mm	600mm	78mm	200W
Chrome	136302	1200mm	500mm	78mm	400W
Chrome	136303	1200mm	600mm	78mm	400W
Chrome	136305	1600mm	600mm	78mm	600W
Chrome	136306	1800mm	600mm	78mm	800W

RICHMOND PLUS

Towelrads

TECHNICAL DATA

Technical Drawings

800 x 500mm

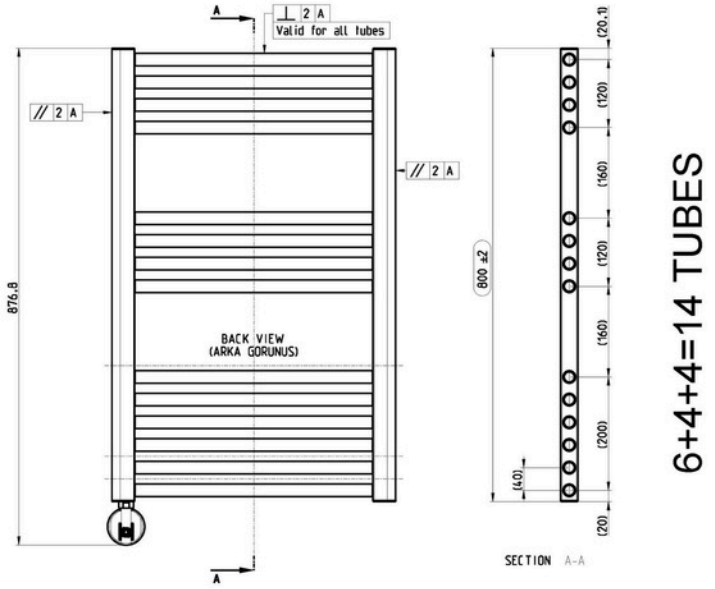

800x600mm

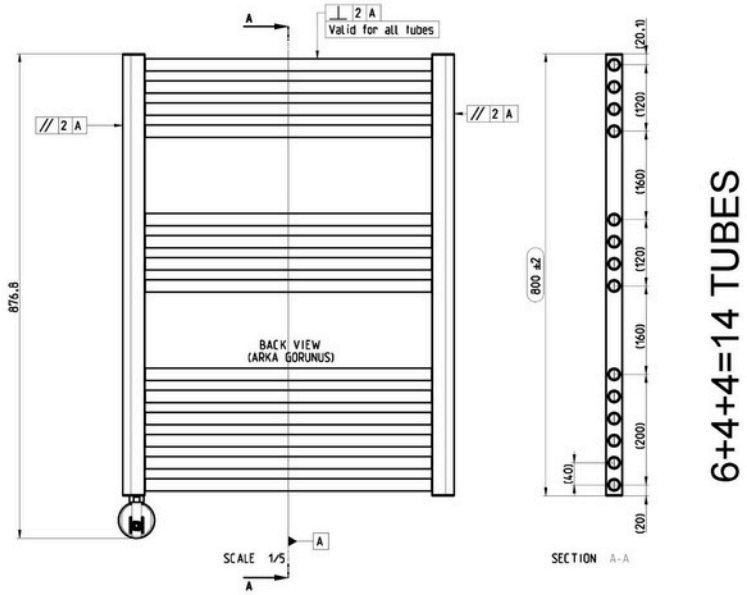

RICHMOND PLUS

TECHNICAL DATA

Technical Drawings

1200 x 500mm

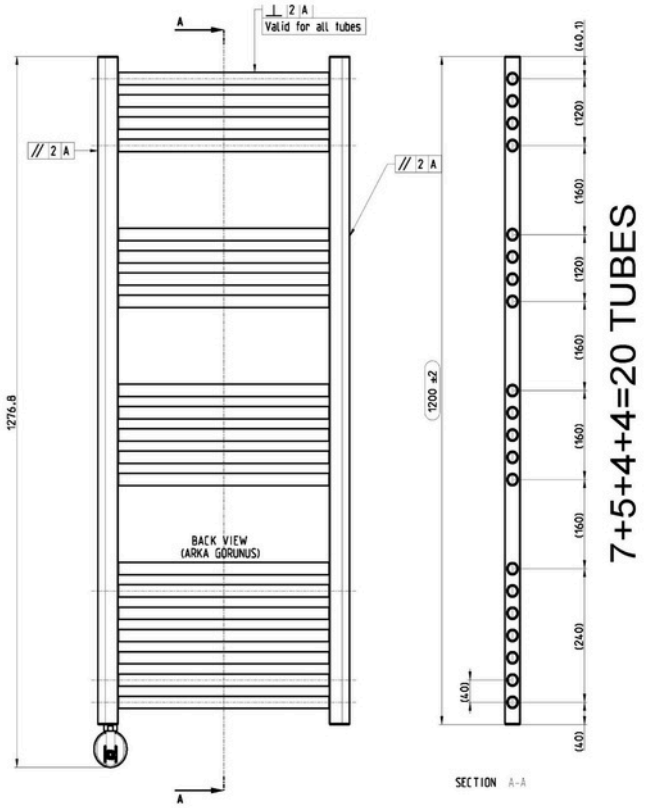

RICHMOND PLUS

TECHNICAL DATA

Technical Drawings

1200 x 600mm

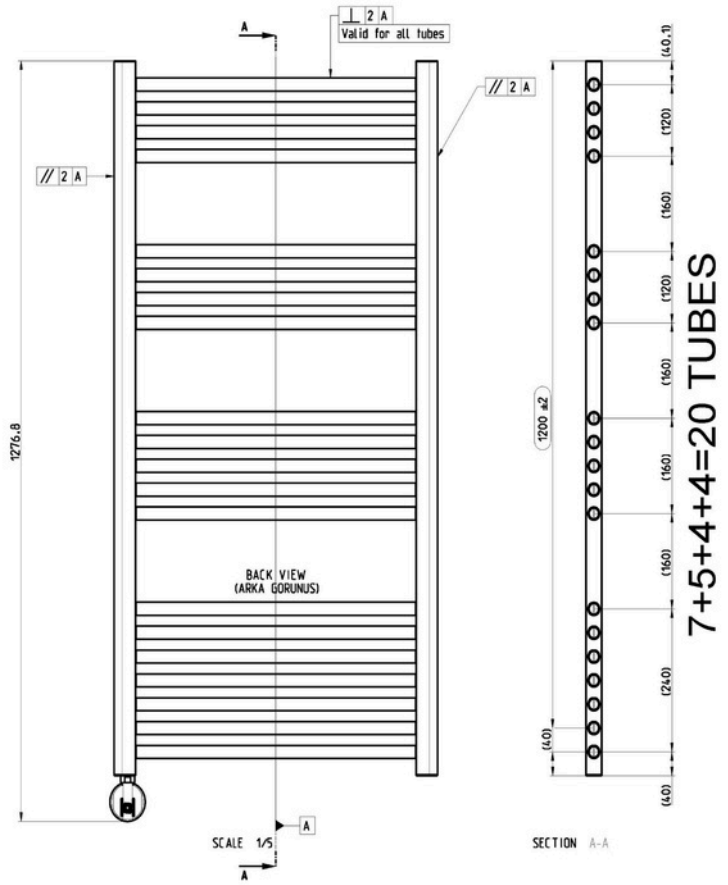

RICHMOND PLUS

TECHNICAL DATA

Technical Drawings

1600 x 600mm

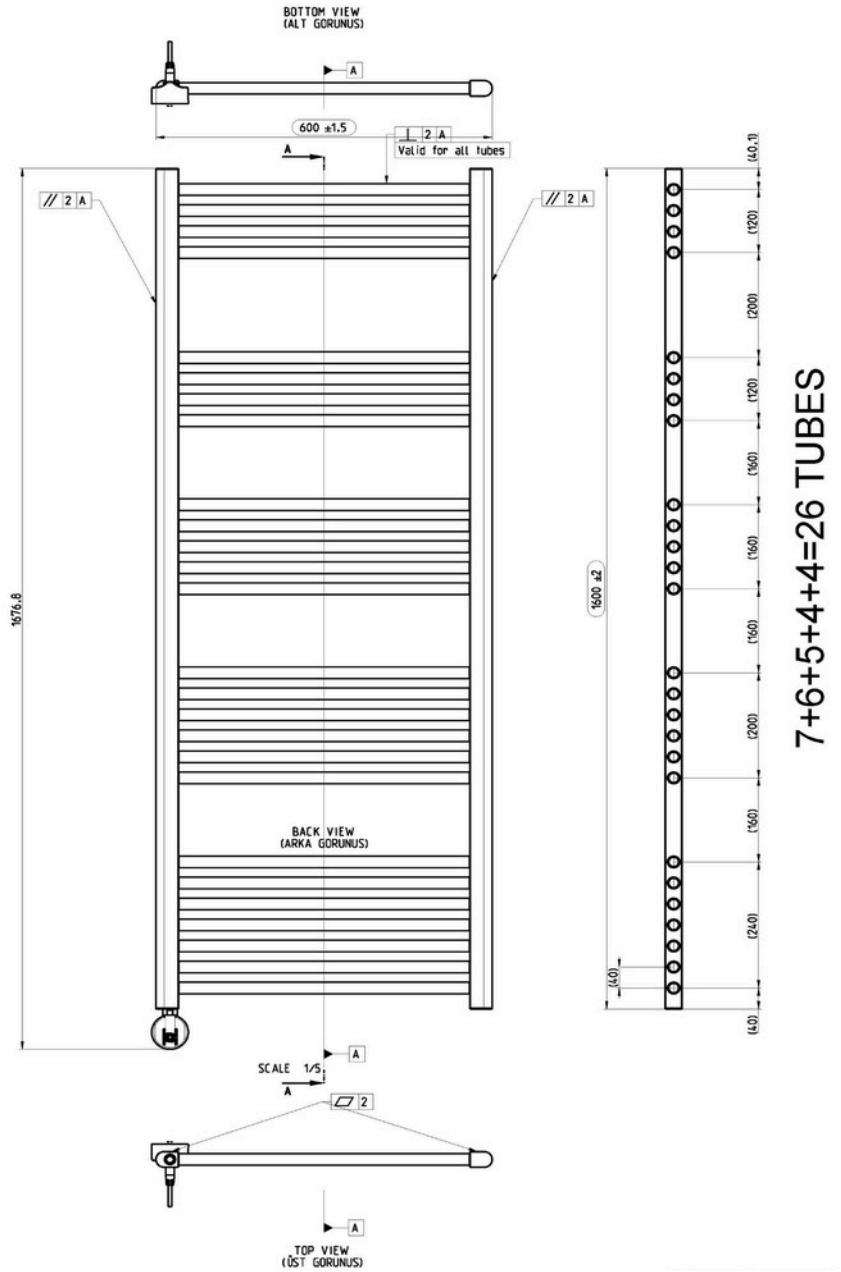

RICHMOND PLUS

TECHNICAL DATA

Technical Drawings

1800 x 600mm

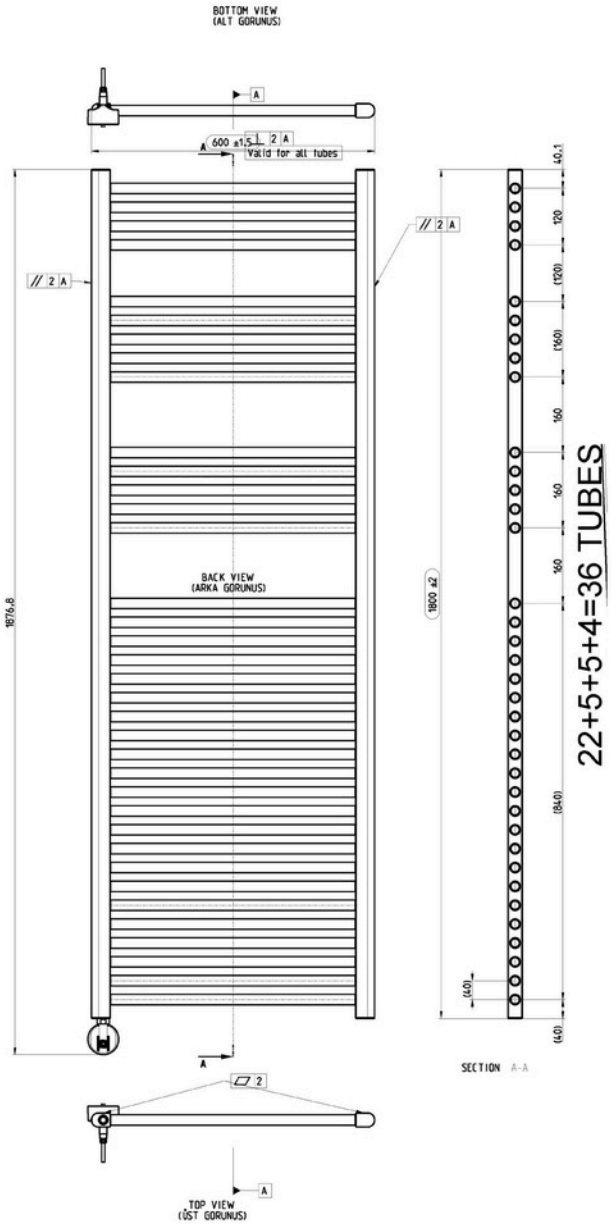

RICHMOND PLUS

TECHNICAL DATA

Technical Drawings

Element

