STRATUS IGNEOUS GRANITE SINK

STR780PE/

RANGEMASTER
SINKS & TAPS

Size: 780 x 500 mm

Featuring a defined linear drainer and crisp geometric corners, the Stratus Igneous sink collection embodies refined modern design. Available in four versatile bowl configurations and five contemporary colourways, the collection offers exceptional flexibility with the choice of two compact options, perfectly suited to smaller spaces.

- Premium sink design with a contemporary drainer design
- New '*Black edition*' available featuring a black waste kit – available in Charcoal black only
- Available in four bowl configurations
- Available in 5 colourways
- 25-year warranty

Material	Igneous Granite
Material Gauge	-
Material Finish Bowl	-
Material Finish Drainer	-
Drainer Position	Reversible
Overall Length (mm)	780
Overall Width (mm)	500
Main Bowl Length (mm)	450
Main Bowl Width (mm)	435
Main Bowl Depth (mm)	200
Second Bowl Length (mm)	-
Second Bowl Width (mm)	-
Second Bowl Depth (mm)	-
Tap hole Size (mm)	1x 35 (semi-punched)
Waste Size (mm)	1x 90mm
Waste Kit	Included with sink (1 x 90mm BSW)
Min. Base Unit (mm)	600
Cutout Size Length (mm)	
Cutout Size Width (mm)	
Warranty Sinks (years)	25
Product Code	STR780PE/
Barcode	

Date of download: October 12, 2026

AGA Rangemaster continuously seeks improvements in specification, design and production of products and thus, alterations take place periodically. Whilst every effort is made to produce up-to date resources, the information included here is intended as a guide. Always refer to the product's installation instructions when fitting, installation work should be completed a professional tradesman.

STRATUS IGNEOUS GRANITE SINK

STR780PE/

Technical Drawing

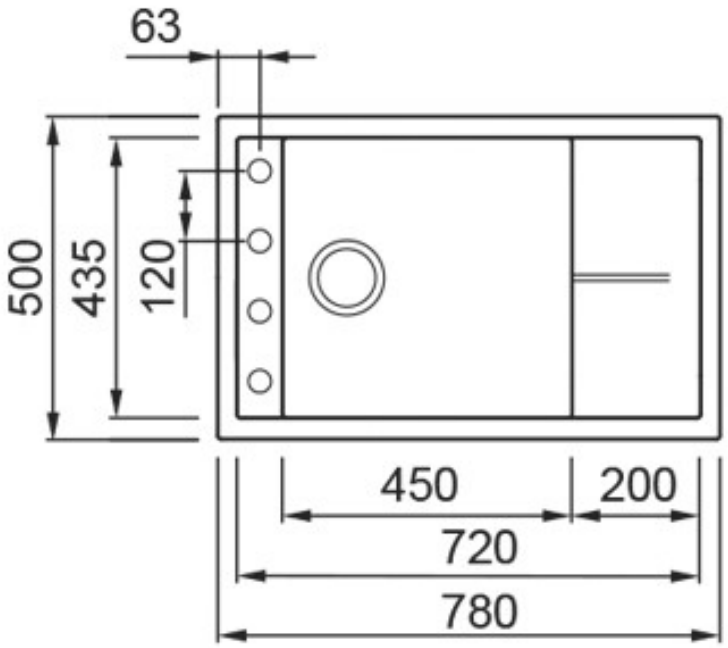

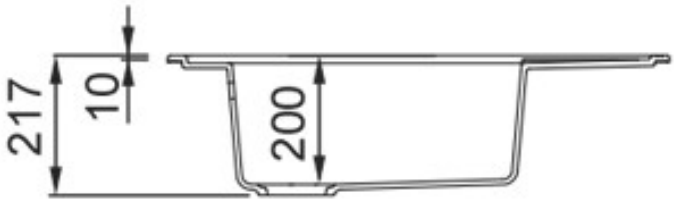

Date of download: October 12, 2026

AGA Rangemaster continuously seeks improvements in specification, design and production of products and thus, alterations take place periodically. Whilst every effort is made to produce up-to date resources, the information included here is intended as a guide. Always refer to the product’s installation instructions when fitting, installation work should be completed a professional tradesman.

STRATUS IGNEOUS GRANITE SINK

STR780PE/