# STRATUS IGNEOUS GRANITE SINK

STR780AW/

RANGEMASTER
SINKS & TAPS

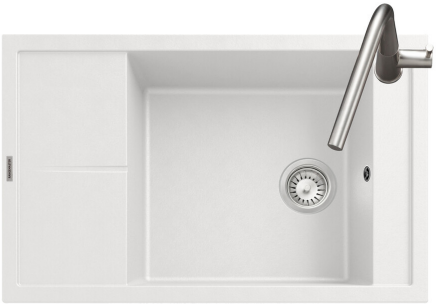

**Size: 780 x 500 mm**

Featuring a defined linear drainer and crisp geometric corners, the Stratus Igneous sink collection embodies refined modern design. Available in four versatile bowl configurations and five contemporary colourways, the collection offers exceptional flexibility with the choice of two compact options, perfectly suited to smaller spaces.

- Premium sink design with a contemporary drainer design
- New '*Black edition*' available featuring a black waste kit – available in Charcoal black only
- Available in four bowl configurations
- Available in 5 colourways
- 25-year warranty

| | |
|---|---|
| Material | Igneous Granite |
| Material Gauge | - |
| Material Finish Bowl | - |
| Material Finish Drainer | - |
| Drainer Position | Reversible |
| Overall Length (mm) | 780 |
| Overall Width (mm) | 500 |
| Main Bowl Length (mm) | 450 |
| Main Bowl Width (mm) | 435 |
| Main Bowl Depth (mm) | 200 |
| Second Bowl Length (mm) | - |
| Second Bowl Width (mm) | - |
| Second Bowl Depth (mm) | - |
| Tap hole Size (mm) | 1x 35 (semi-punched) |
| Waste Size (mm) | 1x 90mm |
| Waste Kit | Included with sink (1 x 90mm BSW) |
| Min. Base Unit (mm) | 600 |
| Cutout Size Length (mm) | |
| Cutout Size Width (mm) | |
| Warranty Sinks (years) | 25 |
| Product Code | STR780AW/ |
| Barcode | |

Date of download: October 12, 2026

AGA Rangemaster continuously seeks improvements in specification, design and production of products and thus, alterations take place periodically. Whilst every effort is made to produce up-to date resources, the information included here is intended as a guide. Always refer to the product's installation instructions when fitting, installation work should be completed a professional tradesman.

# STRATUS IGNEOUS GRANITE SINK

STR780AW/

**Technical Drawing**

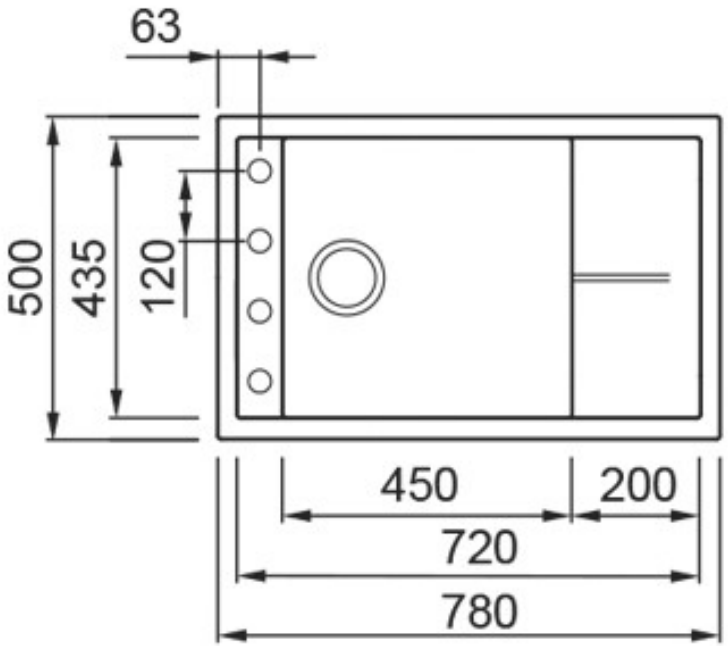


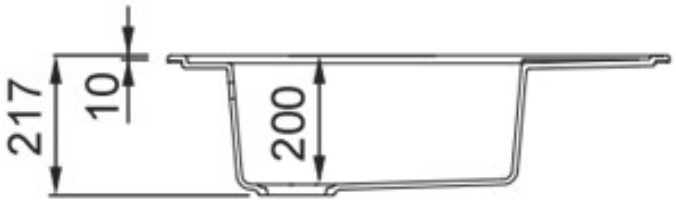


Date of download: October 12, 2026

AGA Rangemaster continuously seeks improvements in specification, design and production of products and thus, alterations take place periodically. Whilst every effort is made to produce up-to date resources, the information included here is intended as a guide. Always refer to the product’s installation instructions when fitting, installation work should be completed a professional tradesman.

# STRATUS IGNEOUS GRANITE SINK

STR780AW/