FORGE 18/10 STAINLESS STEEL SINK

FOR595GL/

Size: 0 x 0 mm

Create a true focal point in your kitchen with the new Forge Hammered Belfast Sink from Rangemaster. Expertly crafted and beautifully finished, its strik
modern durability built to stand the test of time.

Complete the look by pairing it with the new Spectra Tap Collection for a perfectly coordinated and effortlessly stylish finish.

Key Features

Fabricated from heavy gauge 1.2mm steel
PVD finish in Champagne, Copper, Gold & Graphite
Micro-sheen stainless steel finish also available
Distinctive hammered finish
Coordinating waste cover included
25-year warranty

AGA Rangemaster continuously seeks improvements in specification, design and production of products and thus, alterations take place periodically. Whilst every effort is made to produce up-to date resources, the information included here is intended as a guide. Alwa

FORGE 18/10 STAINLESS STEEL SINK

FOR595GL/

Technical Drawing

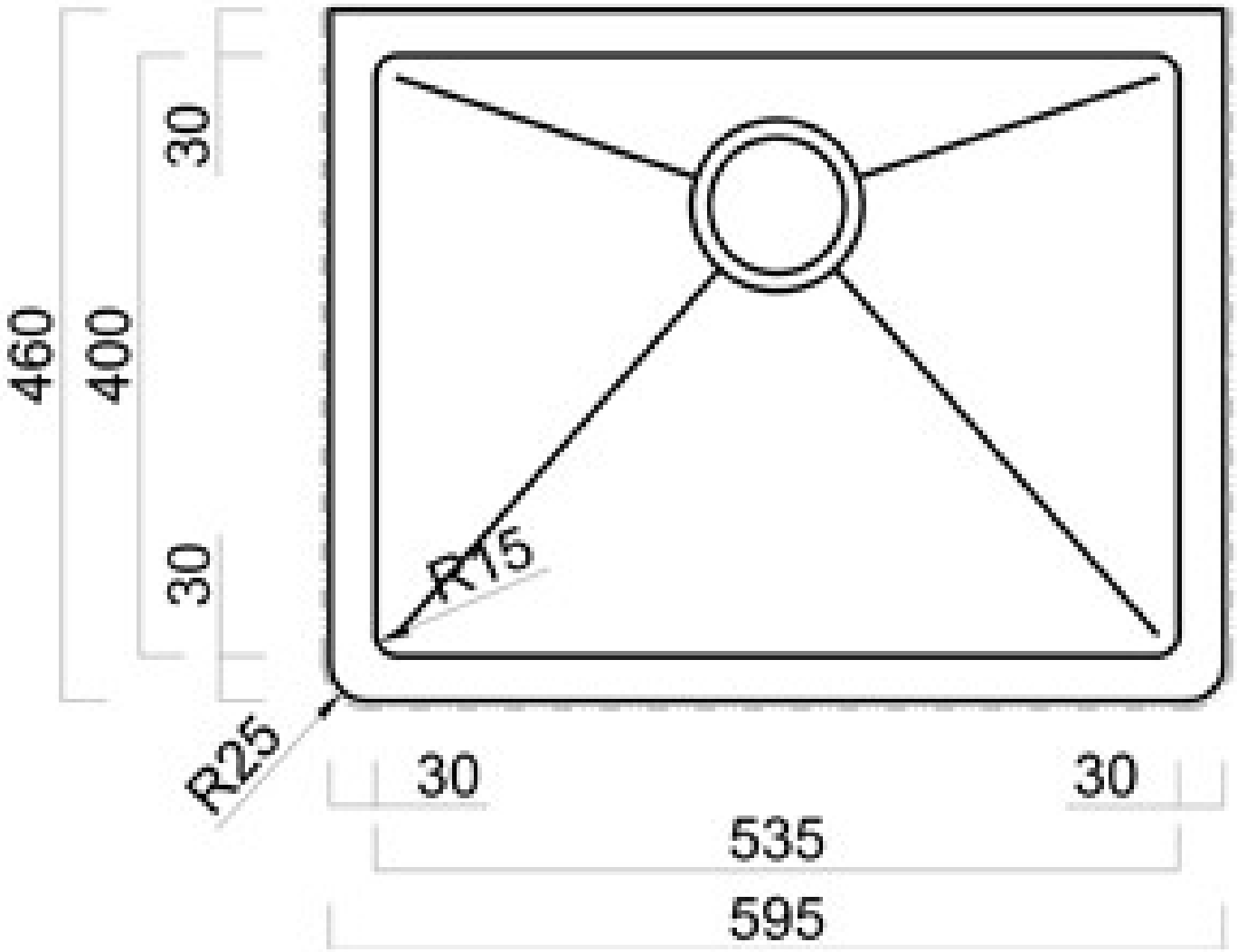
460
400
30
30
R15
R25
30
30
535
595

AGA Rangemaster continuously seeks improvements in specification, design and production of products and thus, alterations take place periodically. Whilst every effort is made to produce up-to date resources, the information included here is intended as a guide. Alwa

FORGE 18/10 STAINLESS STEEL SINK

FOR595GL/