INSTALLATION GUIDE

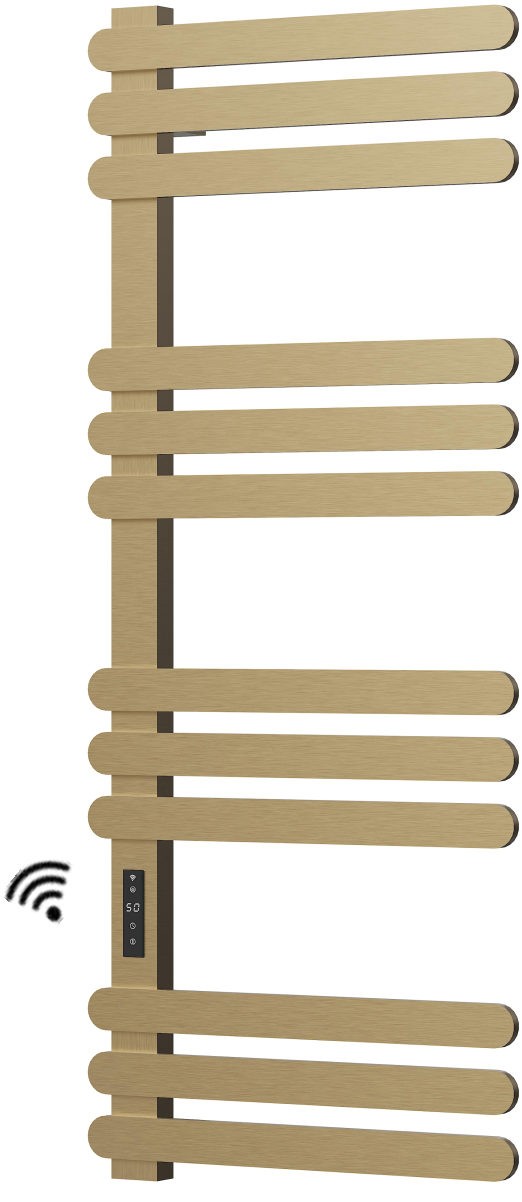

Smart Electric Towel Rail

CE UK CA

Please read this instruction carefully before installation and operation.

Warning: This device must be installed by a licensed electrician.

- This Towel Rail is not intended for use by persons (including children) with reduced physical, sensory or mental capabilities, or lack of experience and knowledge, unless they have been given supervision or instruction concerning use of the Towel Rail by a person responsible for their safety.

- Children must not play with the appliance. Cleaning and maintenance must not be carried out by children without supervision.

- In order to avoid a hazard, this appliance must be installed so that the bottom rail is at least 600mm above the floor.

- The towel rail is intended to warm and dry towels only. It becomes hot during operation, PLEASE BE CAREFUL!

- The towel rail must be installed so that switches and other controls cannot be touched by a person in the bath or shower.

- Do not use the towel rail to hold towels or other items that have been in contact with oil, petroleum-based products, or dry-cleaning fluids.

- Use this Towel Rail only with the voltage specified on the rating label.

- Do not immerse the appliance in water or allow liquid to enter any part of it. Indoor use only.

- Do not operate this towel rail if damaged or after the Towel Rail malfunctions or has been dropped or damaged in any manner. Return to a qualified electrical person for examination, electrical service or repair.

- Use this Towel Rail only as described in this manual. Any other use is not recommended by the manufacturer and may cause fire, electrical shock or injury.

- Do not use the appliance in a window or location where it may be exposed to rain or moisture, as this may result in electric shock.

TOOLS REQUIRED

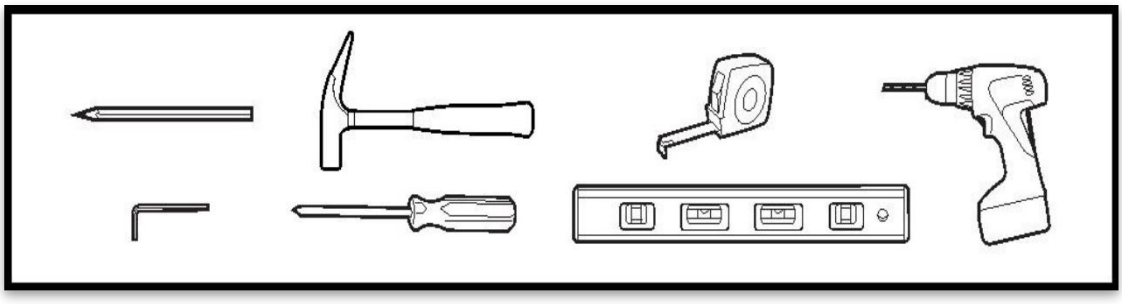

- Pencil
- Hammer
- Measuring Tape
- Hex key
- Screw driver
- Spirit level
- Electric drill

ACCESSORIES

1

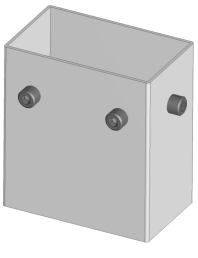

Mounting Foot x 2 (500x800mm)
x 3 (500x1100mm)

3

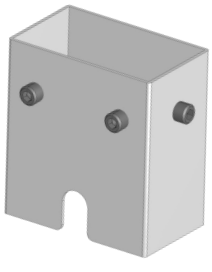

Mounting Foot x 1

4

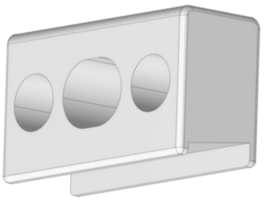

Fixing Block x 2 (500x800mm)
x 3 (500x1100mm)

5

φ8 Wall Anchors x 4 (500x800mm)
x 6 (500x1100mm)

6

Allen Wrench x 1

7

Screw M6*30 x 4 (500x800mm)
x 6 (500x1100mm)

8

Screw M5*65 x 4 (500x800mm)
x 6 (500x1100mm)

Please follow the below installation steps to complete the towel rail installation.

METHOD 1: CONCEALED WIRING

STEP 1

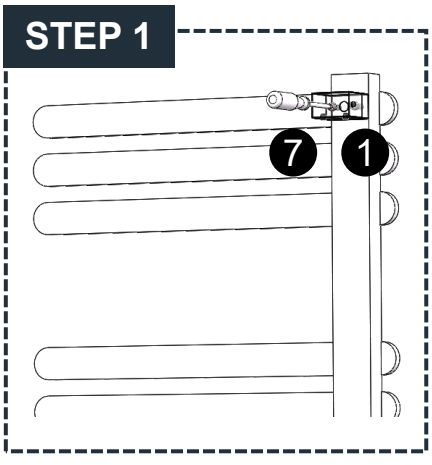

STEP 1: Fix the mounting foot 1 to the threaded holes on the vertical tube, then use a screwdriver to tighten the M6*30 mounting screws 7 .

(Accessories Required: 1 & 7)

Note: The 500x1100mm model includes one additional mounting foot in the middle. The installation method is the same.

STEP 2

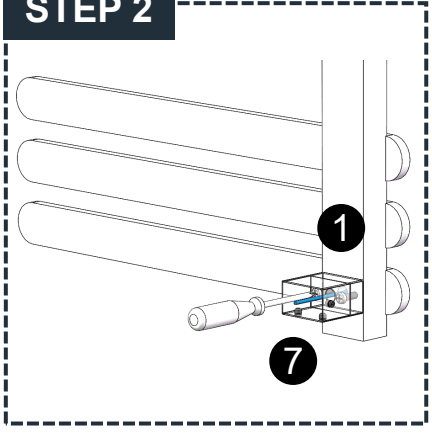

STEP 2: Pass the power cable through the hole in the center of the lower mounting foot 1 . Insert the M6*30 screws 7 through the holes on both side of the mounting foot, connecting them to the vertical tube, and tighten with a screwdriver.

(Accessories Required: 1 & 7)

STEP 3

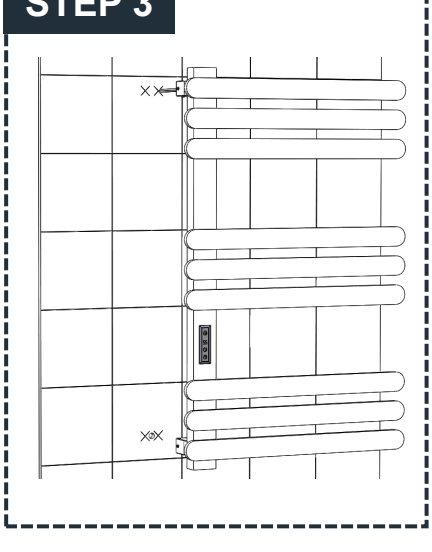

STEP 3: Select the desired installation position and mark the locations of the mounting holes on the wall with a pencil.

Note: The distance between the two expansion holes is 30 mm.

METHOD 1: CONCEALED WIRING

STEP 4

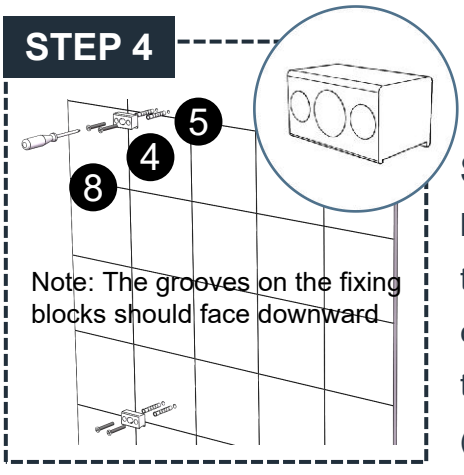

STEP 4: Make the holes with an electric drill. For the lower mounting foot, be sure to drill an additional hole to allow the power cable to pass through the wall. Use a hammer to knock plastic wall anchors 5 into wall completely. Insert the M5*65 screws 8 through the fixing blocks 4 , and then secure them into the wall anchors with an electric drill.

(Accessories Required: 4, 5 & 8)

STEP 5

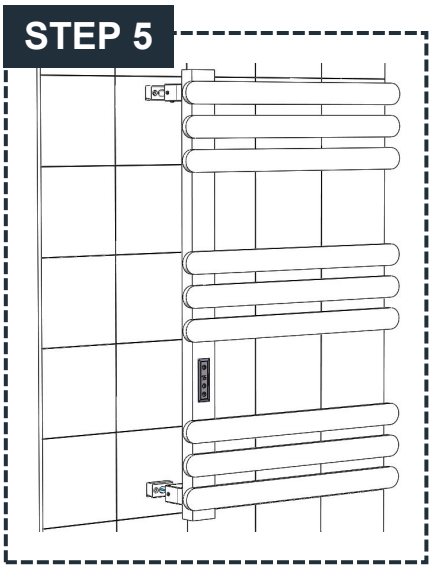

STEP 5: Connect the cable from the lower leg to the power wire inside the wall and then place the towel rail against the fixing blocks that are secured to the wall.

STEP 6

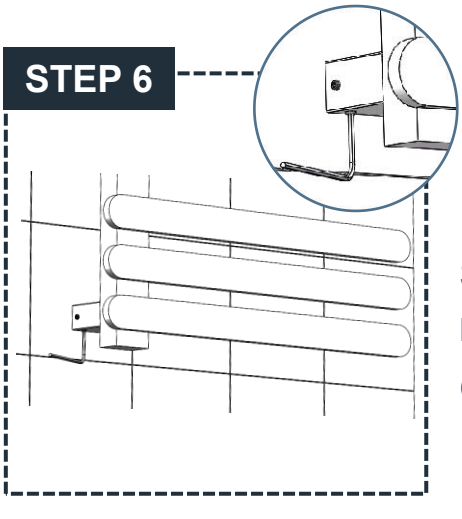

STEP 6: Use the Allen wrench 6 to tighten the hex screws into the holes of all mounting feet to complete the installation.

(Accessories Required: 6)

Warning: To prevent potential safety hazards, it is recommended that grounding and short circuit measurements be performed after installation of the device. This should be done by a licensed electrician.

Please follow the below installation steps to complete the towel rail installation.

METHOD 2: EXPOSED WIRING

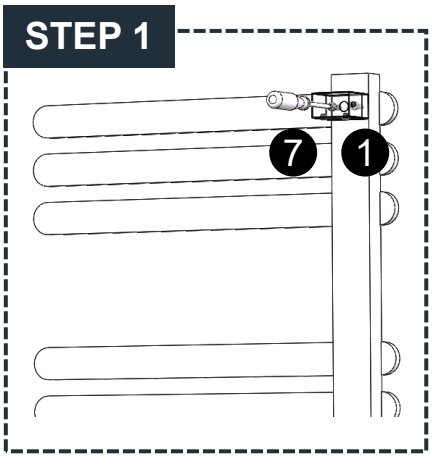

STEP 1: Fix the mounting foot ❶ to the threaded holes on the vertical tube, then use a screwdriver to tighten the M6*30 mounting screws ❼ .

(Accessories Required: 1 & 7)

Note: The 500x1100mm model includes one additional mounting foot in the middle. The installation method is the same.

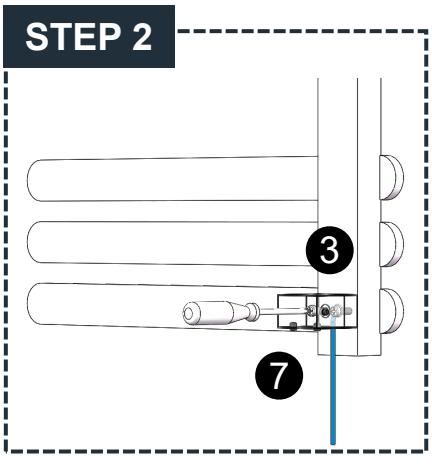

STEP 2: Slide the rubber grommet onto the cable and clip it into the notch on the exposed mounting foot ❸ .

Insert the M6*30 screws ❼ through the holes on both side of the mounting foot, connecting them to the vertical tube, and tighten with a screwdriver. (Accessories Required: 3 & 7)

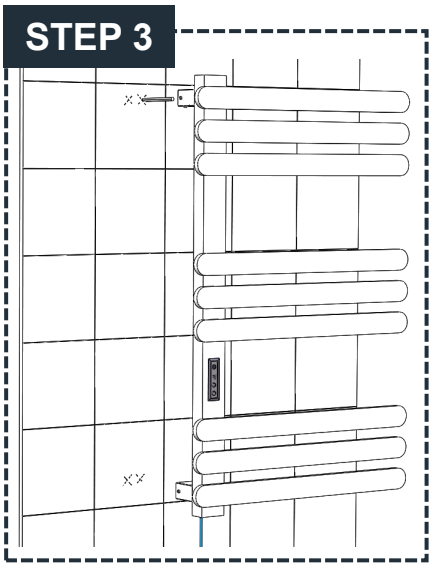

STEP 3: Select the desired installation position and mark the locations of the mounting holes on the wall with a pencil.

Note: The distance between the two expansion holes is 30 mm.

METHOD 2: EXPOSED WIRING

STEP 4

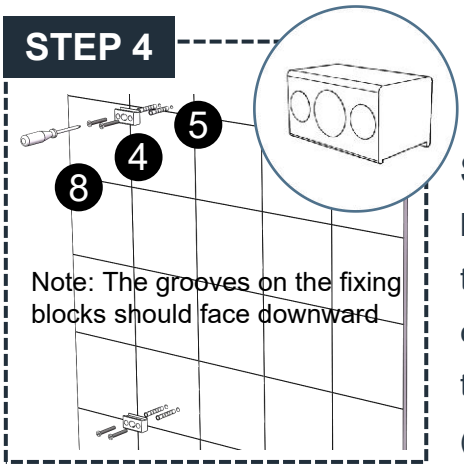

STEP 4: Make the holes with an electric drill. For the lower mounting foot, be sure to drill an additional hole to allow the power cable to pass through the wall. Use a hammer to knock plastic wall anchors 5 into wall completely. Insert the M5*65 screws 8 through the fixing blocks 4 , and then secure them into the wall anchors with an electric drill.

(Accessories Required: 4, 5 & 8)

STEP 5

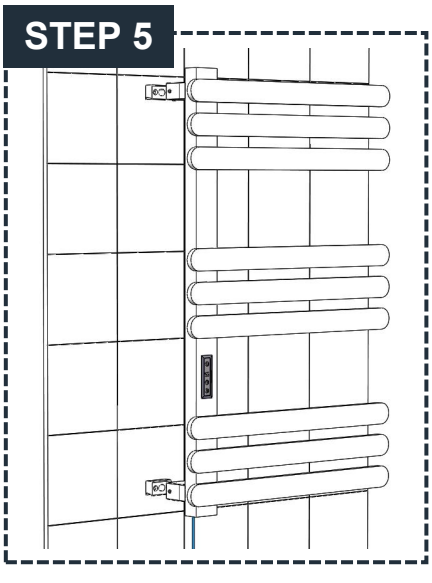

STEP 5: Lie the towel rail against the fixing blocks fixed on the wall.

STEP 6

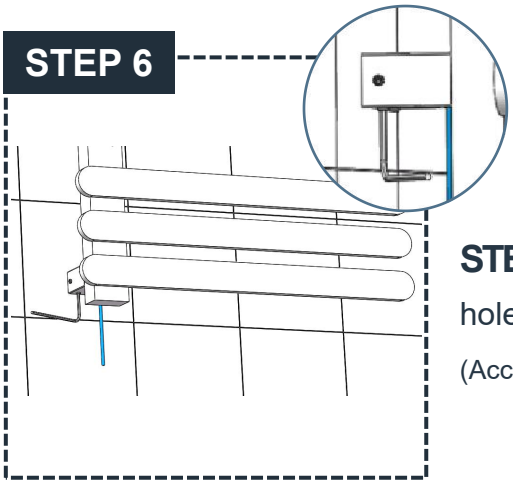

STEP 6: Use the Allen wrench 6 to tighten the hex screws into the holes of all mounting feet to complete the installation.

(Accessories Required: 6)

Warning: To prevent potential safety hazards, it is recommended that grounding and short circuit measurements be performed after installation of the device. This should be done by a licensed electrician.

IMPORTANT FOR END-USERS!

Avoid overloading or excessive overlapping of towels to ensure optimal heat distribution and enhance comfort.

Overloading or excessive overlapping of towels may cause the unit to overheating.

HOW TO FOLD YOUR TOWELS?

Fold the towel in half either lengthwise or widthwise, then drape it neatly over the top bar. For best results, ensure the towel makes contact with as many bars as possible and avoid excessive overhang.

Note: For larger towels, folding into thirds may be necessary to fit properly on the rack.

Width fold

Length fold

HOW TO CLEAN YOUR HEATED TOWEL RAIL?

Before cleaning, switch off the unit and allow it to cool completely to room temperature.

Wipe the surface with a soft cloth dampened with warm water and mild soap. Dry immediately with a clean, dry cloth.

Do not use abrasive pads or harsh cleaning products, as they may damage the surface or finish.

Do not use stainless steel cleaner on painted finishes.

Stainless steel cleaners may be used on stainless finishes only.

HOW TO USE THE CONTROLLER ON THE TOWEL RAIL?

Heating Mode

- Connect the device to power.
- Press the button to switch on the controller.
- Use the button to select the desired temperature within the range of 30-60°C, in 5°C increments.

Once the temperature is set, the controller will enter a working state if there's no operation for 3 seconds, indicated by the steady temperature indicator.

During heating, a flashing dot will appear in the bottom right corner of the set temperature. Once the unit reaches the preset temperature, the dot will disappear, and heating will pause until the temperature decreases. If the temperature drops below a certain level, the thermostat will automatically activate to maintain a constant temperature, and the flashing dot will reappear.

Timer Mode

After selecting the desired temperature, simply press the button to adjust the hours according to your preference. The available range spans from 1 to 8 hours, adjustable in 1-hour increments.

Once it reaches the Max limit of 8 hours, pressing the button again will display 'oN', indicating the device will maintain consistent operation for a full 24-hour cycle, with no restrictions on heating time.

Upon setting the desired time, the controller will enter a working state if there's no operation for 3 seconds, indicated by the steady hour indicator. During heating, a flashing dot will appear in the bottom right corner of the set hours. Once the unit reaches the preset temperature, the dot will disappear, and heating will pause until the temperature decreases. Once the predetermined time elapses, the device will shut down and automatically switch off.

LST(Low surface temperature) Mode

In the powered-on state, press and hold the button for 5 seconds to enter LST mode. “Lo” will appear on the display and all buttons will be locked. Repeat the same procedure to exit LST mode.

In this mode, the device maintains a constant surface temperature of 43°C, which cannot be adjusted.

Child Lock

In the powered-on state, press and hold the and buttons for 5 seconds to lock the display. “LC” will appear and all buttons will be locked. Repeat the same procedure to unlock it.

Memory Function

In the event of a power failure or disconnection, the settings will be saved. When power is restored, the device will continue to operate according to the previous settings.

Connecting to WIFI

- **Downloading the App**

Download the APP onto your smart phone. You can find the app by scanning the QR code below or searching “INOW” in the Google Play or Apple app store. Install and follow the app’s instructions to create an account.

- **Connecting to the App**

To enter the pairing mode, press the ⏻ button to turn the device to Standby mode, then press and hold the ⏻ button for 5 seconds. It will start a 90-second countdown for pairing.

Once connected successfully, the countdown will disappear and “PS” will appear on the display. If the connection fails, “FL” will be shown instead.

- **Adding devices**

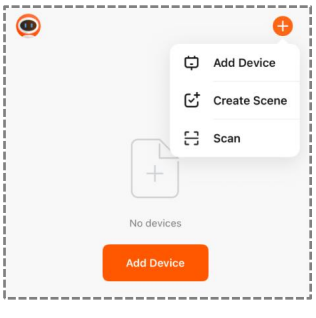

1) Click “+” and “Add Device”

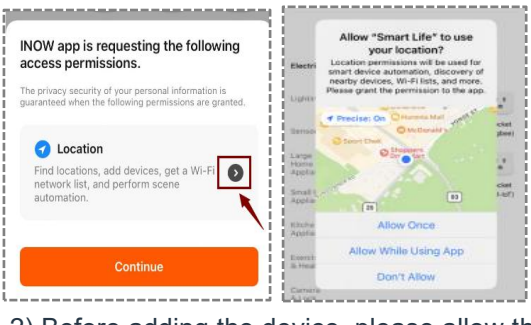

2) Before adding the device, please allow the Location to access

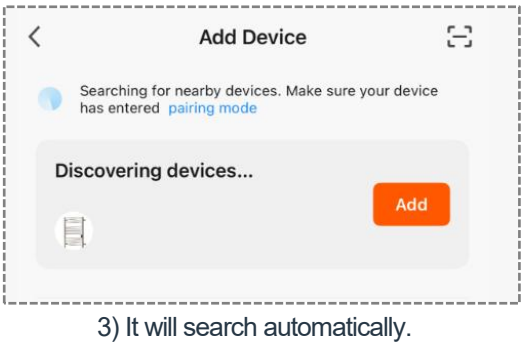

3) It will search automatically. Tap the device icon to add.

4) Choose your WiFi network and enter the password. Press “Next”.

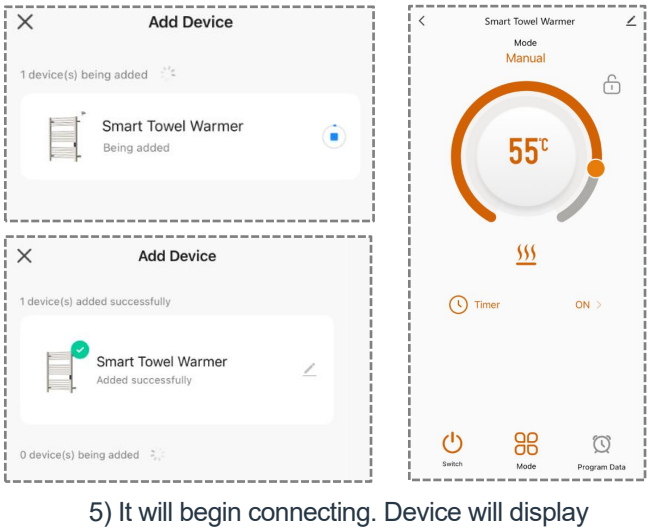

5) It will begin connecting. Device will display on the APP after successfully added.

Using the app

- **Home Overview**

You can use the INOW app to control multiple devices. All devices are displayed on the home screen with their status.

Possible statuses:

• Online – Device will respond to app commands.

• Offline – Device is turned off at wall or power switch. It cannot be controlled by the app.

- **Control Interface**

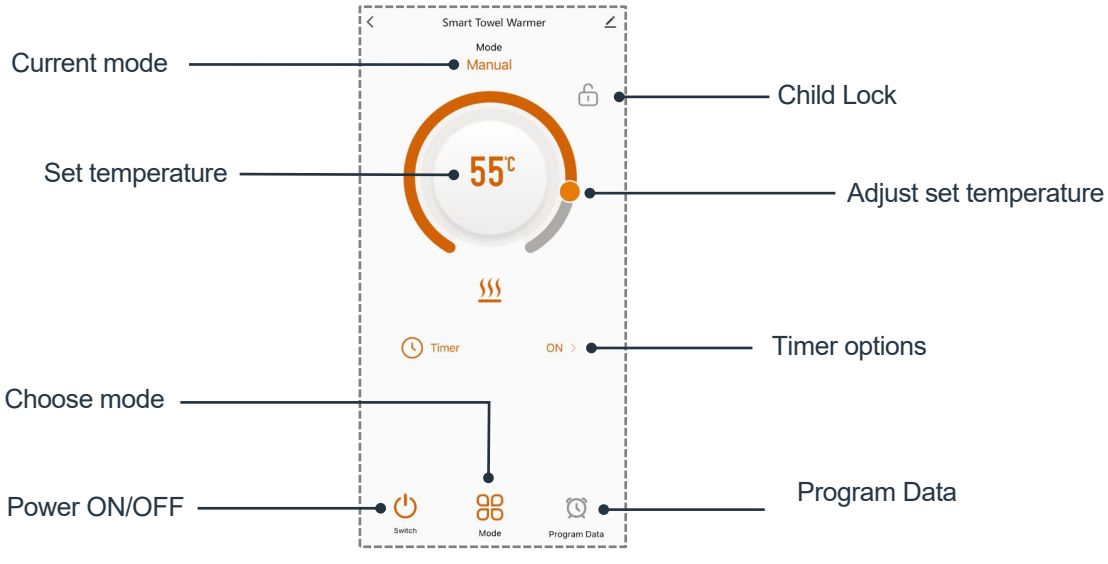

- **Choose Mode**

Tap the mode button on the interface to select a mode.

Manual: Simply use the sliding dial to adjust the set temperature.

Program: The device will operate according to the pre-set program.

LST : The device maintains a constant surface temperature of 43°C. This temperature is fixed and cannot be adjusted.

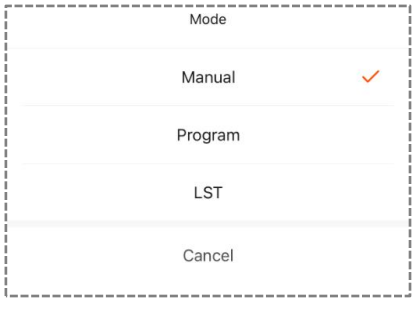

- **Child Lock**

Tap the lock icon in the upper right corner of the interface to lock or unlock the display.

- **Timer Mode**

The timer options range from 1 to 8 hours and ON.

You can adjust the duration based on your preference. Once the set hours are completed, the device will return to standby mode.

"ON" means the device will operate continuously for a full 24-hour cycle, with no limitations on heating time.

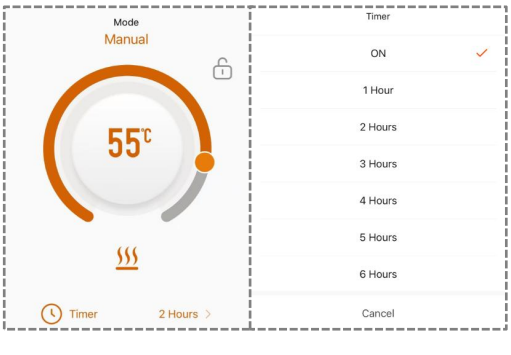

- **Program Mode**

Tap the “Program Data” icon to enter the program setting.

You can reset the program from the default automatic setting by clicking on the starting and ending hours on the axis.

When the program mode is activated, the button on the display becomes inactive. If pressed, the display will flash “Hr” three times to indicate that the device is currently in program mode.

To exit the program mode, press and hold the button on the display for 5 seconds, or switch to Manual Mode in the app. The device will then exit the program mode and operate in manual mode.

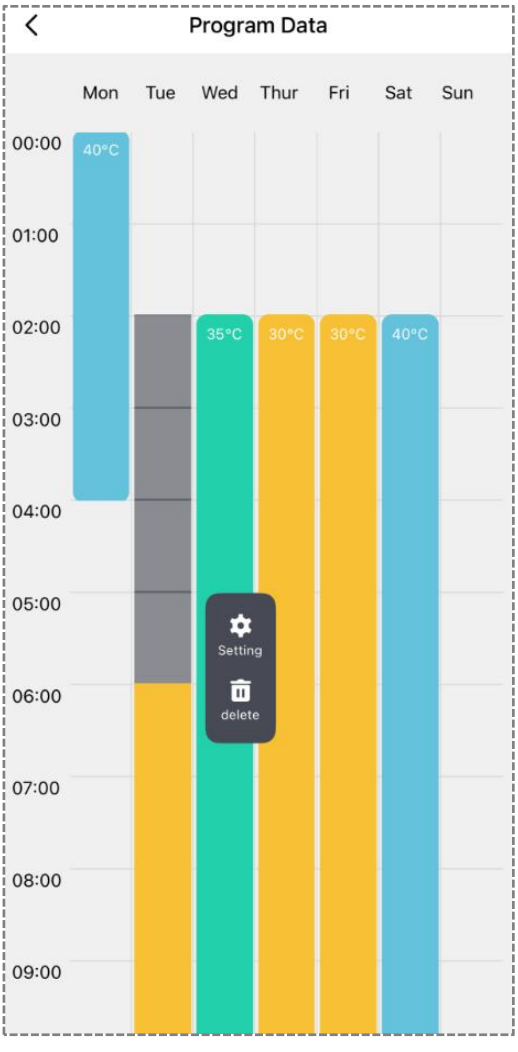

- **Instant Temperature Adjustment Function**

This allows the user to temporarily modify the temperature setting for the next two hours while in Program Mode, after this period it will automatically revert to the original schedule.

In Program Mode, you can activate this function by pressing the button on the display or by using the sliding dial in the app to adjust the temperature.

Default data list as below:

Period		Time	Temperature
Work day (Monday-Friday)	1	6:00	60°C
	2	9:00	30°C
	3	17:00	60°C
	4	22:00	30°C
Weekend (Saturday-Sunday)	1	8:00	60°C
	2	10:00	30°C
	3	17:00	60°C
	4	22:00	30°C

TECHNICAL SPECIFICATIONS

Code	Size	Color	Power	Voltage
Selecta	500*800mm	Chrome/Matt Black/ Brushed Brass	270W	230VAC,50Hz
Selecta	500*1100mm	Polished/Matt Black/ Brushed Brass	360W	230VAC,50Hz

DISPOSAL

In accordance with WEEE Directive 2012/19/EU, the icon with the crossed-out waste bin on electrical or electronic equipment stipulates that this equipment must not be disposed of with household waste at the end of its life. You will find collection points for free return of waste electrical and electronic equipment in your vicinity. The addresses can be obtained from your local authority.

The separate collection of waste electrical and electronic equipment enables the re-use, recycling and other forms of recovery of waste equipment, and prevents any negative effects for the environment or human health.