Glow-worm

Climapro$_2$RF
Installation

Wireless room thermostat with receiver

www.glow-worm.co.uk

TABLE OF CONTENTS

INTRODUCTION

1 Instructions guidance 3
- 1.1 Product documentation 3
- 1.2 Associated documents 3
- 1.3 Explanation of symbols 3

2 Climapro$_2$ RF description 3
- 2.1 Regulation and statutory requirements 3
- 2.2 Operational Diagram 3

3 Safety instructions and regulations 3
- 3.1 Safety regulations 3
- 3.2 Regulations 4

4 Recycling 4
- 4.1 Climapro$_2$ RF 4
- 4.2 Packaging 4

INSTALLATION

5 Installation location 5
- 5.1 Room thermostat 5
- 5.2 Radio receiver 5

6 Climapro$_2$ RF Installation 5
- 6.1 Dimensions 5
- 6.2 List of contents 6

7 Fixing 6
- 7.1 Fixing the room thermostat 6
- 7.2 Installing the radio receiver 7

8 Electrical connections 8
- 8.1 Main board 8
- 8.2 Connecting the radio receiver 8
- 8.3 Pairing (recognition) 9

9 Commissioning 10
- 9.1 Appliances included in the installation 10
- 9.2 Room thermostat 10

10 Specific settings 10
- 10.1 Main settings 10
- 10.2 Access to the installer menu 11
- 10.3 Description of the installer menu 11
- 10.4 Heating function 11
- 10.5 Domestic hot water function 12
- 10.6 Cooling function 13
- 10.7 Options 13
- 10.8 Radio 15

11 Control / Commissioning 15

12 User information 15

TABLE OF CONTENTS

MAINTENANCE

13 Fault diagnosis 16

TECHNICAL DATA

14 Climapro$_2$ RF 17
15 Radio receiver 17

INTRODUCTION

1 Instructions guidance

1.1 Product documentation

The instructions are an integral part of the Climapro2 RF and must be handed to the user on completion of the installation in order to comply with the current regulation.

- Carefully read the manual, to enable safe installation, use and servicing. No liability can be accepted in the event of damage for not complying with the guidance in this instruction manual.

1.2 Associated documents

- User instructions

1.3 Explanation of symbols

DANGER: Risk of electric shock.

ATTENTION: Risk of damage to the Climapro$_2$ RF or to its vicinity.

IMPORTANT: Useful information.

2 Climapro$_2$ RF description

2.1 Regulation and statutory requirements

CE Mark

The CE mark indicates that the appliances described in this manual are in compliance with the following directives:

- European Directive Num. 2004-108 of the European Parliament and the Council regarding electromagnetic compatibility
- European Directive Num. 2006-95 of the European Parliament and the Council regarding low voltage
- Directive relating to telecommunications equipment (Council of the European Community directive R&TTE 99/5/CEE).

2.2 Operational Diagram

The room thermostat communicates with a control unit via a radio receiver.

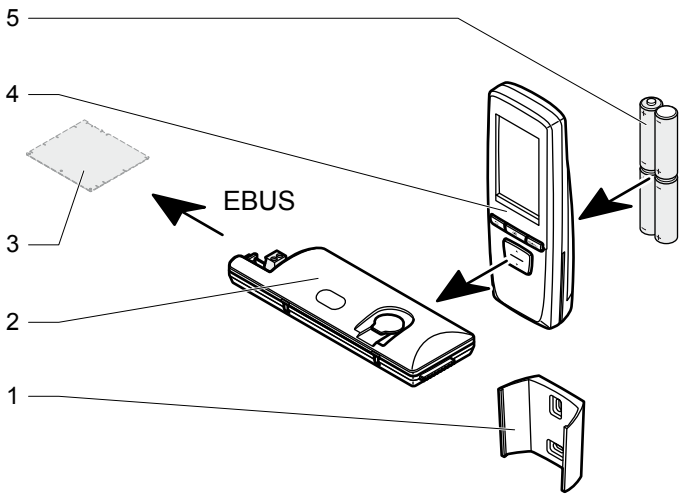

Legend
1 Wall support for the Climapro$_2$ RF
2 Radio receiver connected to the heating system
3 Testing heating system
4 Room thermostat
5 Batteries

3 Safety instructions and regulations

3.1 Safety regulations

All work inside Climapro$_2$ RF must be carried out by a qualified professional or Glow-worm's After-Sales Service.

Climapro$_2$ RF must only be installed by a qualified and responsible professional, so as to respect the applicable regulations and rules

Respect the basic safety instructions:

- Stop the appliance.
- Cut the electrical power to the appliance.
- When work on the appliance is completed, perform an operational test and check for safety.

3.2 Regulations

During the installation and activation of the appliance, the decrees, directives, technical regulations, standards and clauses hereafter must be complied with in the versions that are currently in force.

4 Recycling

The recycling of the packaging must be carried out by the qualified professional who installed the room thermostat.

4.1 Climapro$_2$ RF

Most of the appliance is made of recyclable materials.

This symbol indicates that this unit must not be disposed of with household waste. It should be selectively collected for energy recovery, reuse or recycling.

- Take the unit to an appropriate collection point for processing, energy recovery and recycling of waste.

By complying with this directive, you will contribute to the preservation of natural resources and the protection of human health.

4.2 Packaging

We recommend that you recycle the packaging of Climapro$_2$ RF in a responsible fashion.

- Sort the waste in order to separate those elements which can be recycled (cardboard, plastics) and those which cannot be recycled.
- Dispose of the waste in accordance with existing regulations.

INSTALLATION

5 Installation location

5.1 Room thermostat

- Explain the following requirements to the user.

Install the Climapro$_2$ RF:

- in a room protected from frost,
- on an interior wall of the main room in the home,
- at approximately 1.50 metres from the floor (according to the regulations in force).

Do not install the Climapro$_2$ RF:

- Near sources of heat, such as radiators, chimney walls, televisions or solar radiation,
- above a cooker that is likely to give off steam and grease,
- on cold walls,
- between units or behind curtains or other objects that might disturb temperature recording for the ambient air in the room,
- in a room that is heavily loaded with dust or where the atmosphere is corrosive,
- near air currents that may come from doors or windows.

5.2 Radio receiver

Not all appliances have a location for holding the radio receiver. In this case, the radio receiver can be fixed to the wall.

Inside the appliance:

- Install the radio receiver in the appliance in the location provided (see the appliance installation manual).

Outside the appliance:

- Install the radio receiver near the appliance at approximately 1.8 metres from the ground.
- Keep the radio receiver away from all metallic parts (cables, electrical circuit boxes, metal walls) so as not to disturb the radio transmission.

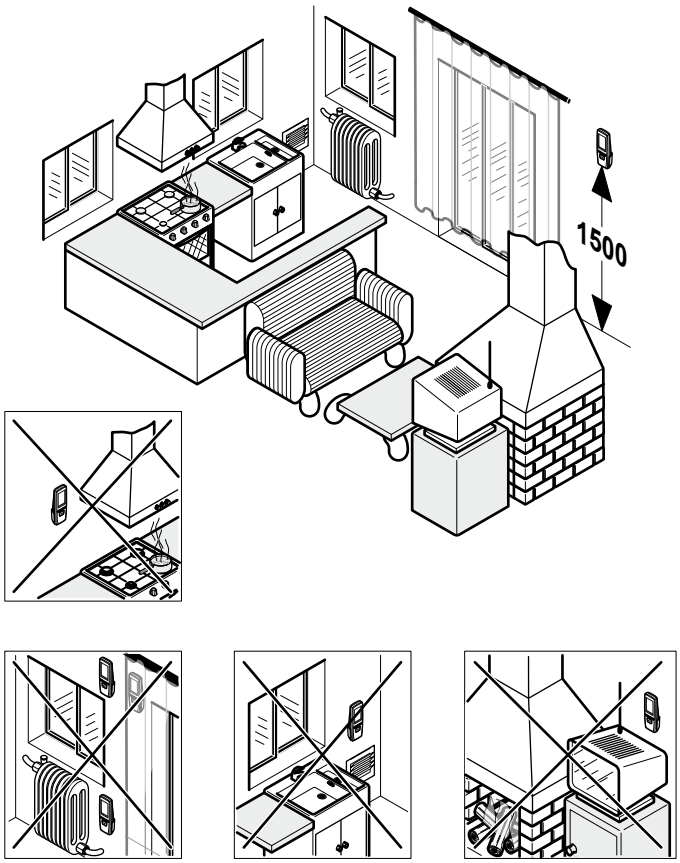

6 Climapro$_2$ RF Installation

All of the measurements in this chapter are expressed in mm.

6.1 Dimensions

6.1.1 Room thermostat

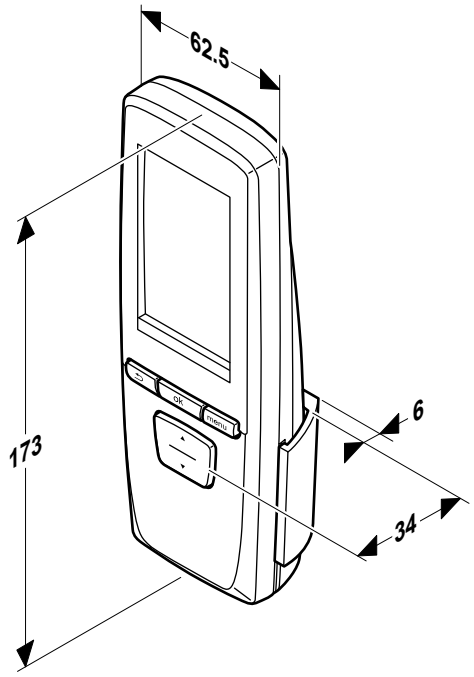

6.1.2 Wall support for the ambient temperature thermostat

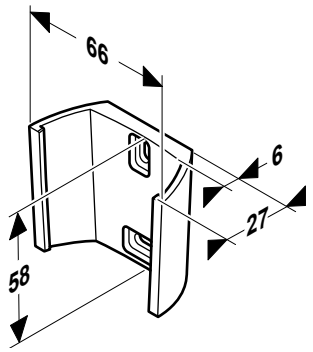

6.1.3 Radio receiver

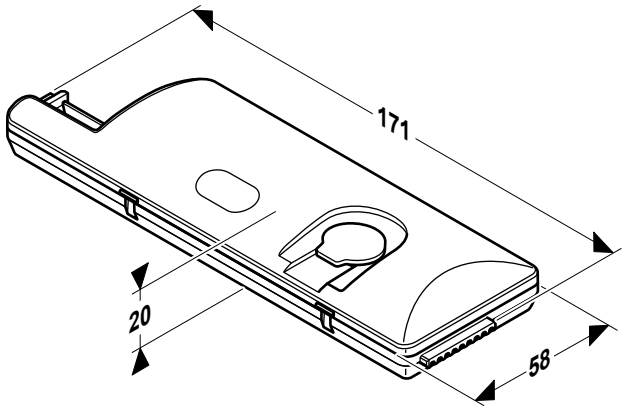

6.2 List of contents

This kit is delivered with:

- Climapro$_2$ RF programmable room thermostat
- Wall support for the Climapro$_2$ RF
- Radio receiver
- Packet containing 2 fixing screws with rawlplugs
- 4 “AA LR6 " alkaline batteries
- EBUS cable for radio receiver

7 Fixing

7.1 Fixing the room thermostat

- Determine the location in which the installation is to be effected.See the "Installation selection" chapter.

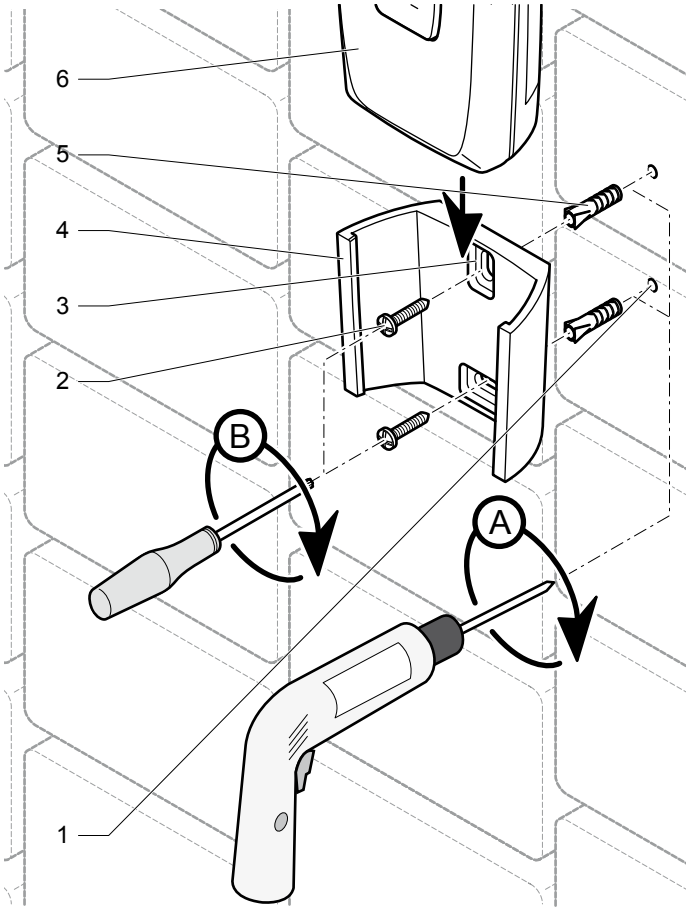

Legend
1 Drilling
2 Fixing screw
3 Fixing holes
4 Room thermostat support
5 Plugs
6 Room thermostat

- Position the room thermostat support (4) on a wall.
- Drill (A) the screw holes (1) in accordance with 2 mounting holes (3) in the wall support (4).
- Insert the rawlplugs (5) in the holes (1).
- Secure (B) the room thermostat support (4) with screws (2).
- Slide the room thermostat (6) into its support (4).

7.2 Installing the radio receiver

Case n°1 - radio receiver on control box unit

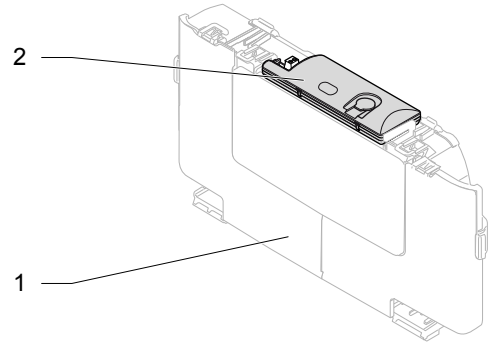

Legend
1 Control box unit
2 Radio receiver

- Slide the radio receiver into the notches.

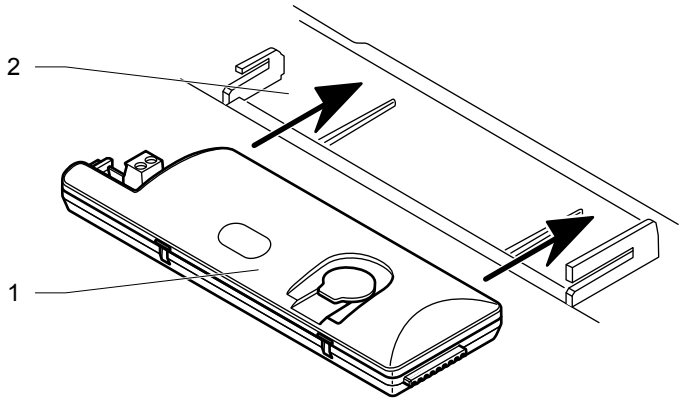

Legend
1 Radio receiver
2 Location of radio receiver

Case n°2 - radio receiver in the control box unit

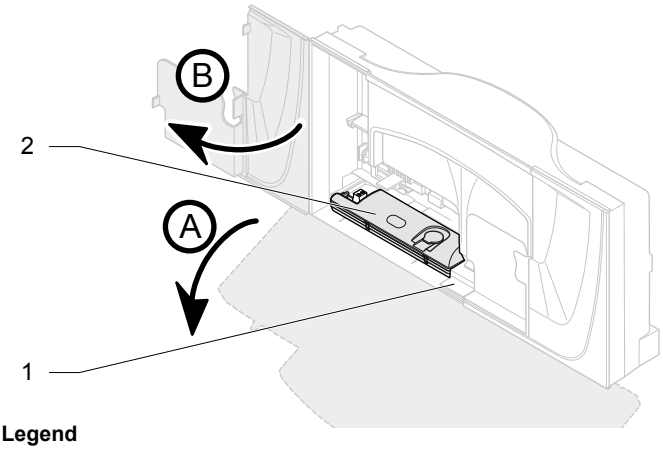

Legend
1 Control box unit
2 Radio receiver

The receiver should be installed outside the appliance if the appliance control box does not have a location for the radio receiver.

Case n°3 - radio receiver outside appliance

- Determine the installation location. See the "Installation location" chapter.

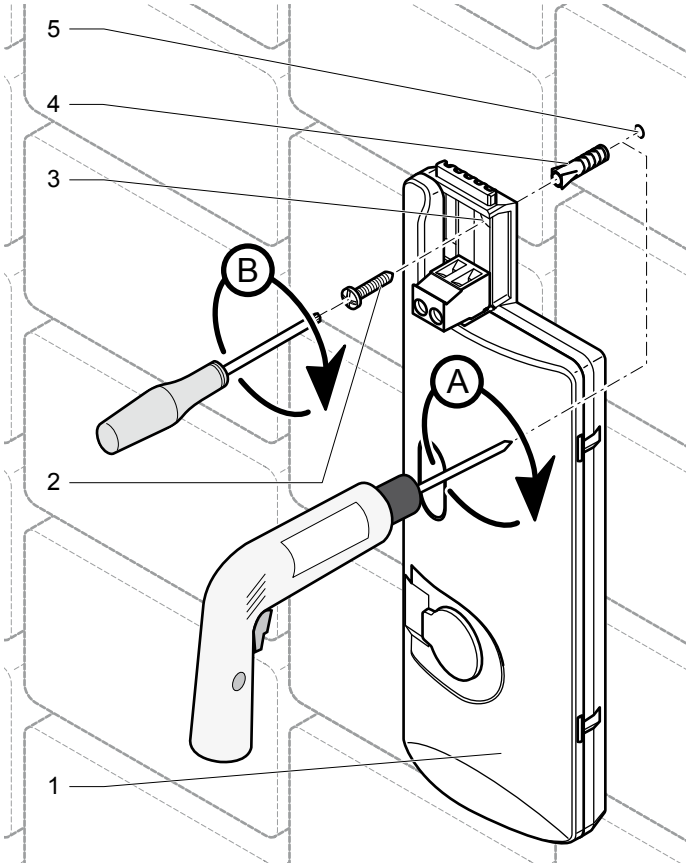

Legend
1 Radio receiver
2 Fixing screw
3 Fixing holes
4 Plugs
5 Drilling

- Position the radio receiver (1) on a wall.
- Drill the hole (5) for the fixing screw in accordance with the fixing hole (3) on the unit or use the sticky pad if provided.
- Insert the rawlplug (4) in the drilled hole(5).
- Fix the radio receiver with the fixing screw (2).
- Respect the standards for electrical installations in force for connecting the ebus cable between the radio receiver and the appliance.

8 Electrical connections

The electrical connection of the room thermostat must be made only by a qualified engineer.

The radio receiver must be connected to the eBUS connector.

8.1 Main board

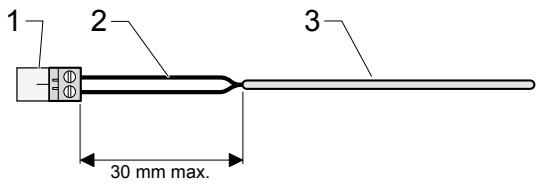

Legend
1 Connector
2 Electrical wires
3 Insulation

When connecting electrical cables to a connector of the main board:

- Maintain a maximum distance of 30 mm between the connector (1) and the insulation (3).

8.2 Connecting the radio receiver

The location of the EBUS terminal block varies according to the heating system. It is always identified by having "BUS" written on it.

- Use the EBUS connection cable provided.
- Cut the EBUS connection cable to the length necessary for your installation.

Case n°1 - radio receiver on the control box

- Connect the EBUS cable, following the order of operations from (A) to (F).

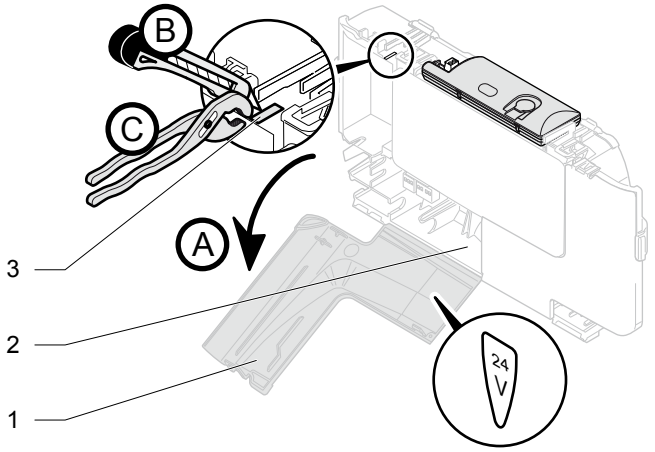

Legend
1 Access for 24 V connection
2 Control box
3 Pre-cut part of control box unit

- Open (A) the access for the 24 V connection (1).
- Cut (B) the pre-cut part (3) of the control box unit (2).
- Remove (C) the pre-cut part of the control box unit (2).

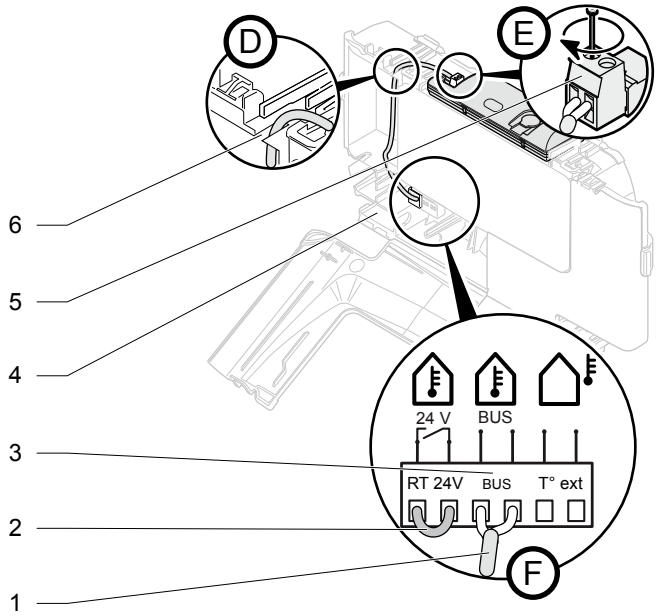

Legend
1 EBUS connecting cable
2 Link the connection terminal block on the room thermostat
3 EBUS terminal block for the main board
4 Control box unit
5 Radio receiver connector
6 Pre-cut part of control box unit

- Do not remove the link from the terminal block connecting the room thermostat to the main board.
- Pass (D) the EBUS cable (1) through the cable passage created by removing the pre-cut part (6).
- Connect (E and F) the EBUS cable (1) to the radio receiver's connector (5) and to the EBUS terminal block on the main board (3). There is no polarity that must be respected.

Case n°2 - radio receiver in the control box unit

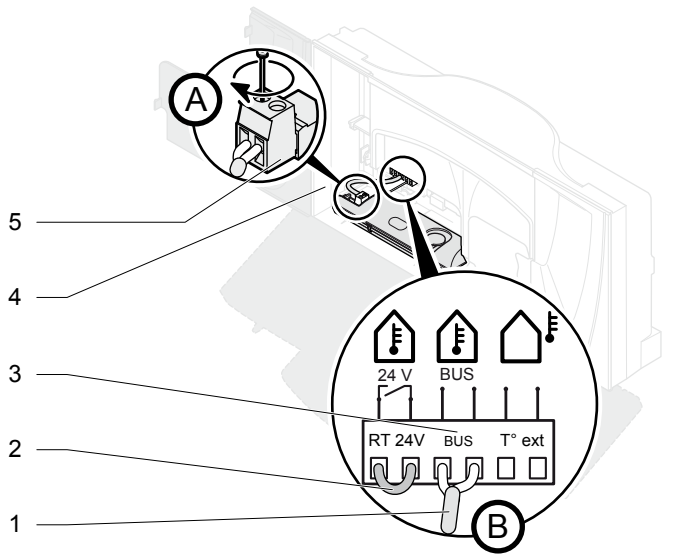

Legend
1 EBUS connecting cable
2 Link for the connection terminal block on the room thermostat
3 EBUS terminal block for the main board
4 Control box unit
5 Radio receiver connector

- Do not remove the link from the terminal block (2) connecting the room thermostat to the main board.
- Connect (A and B) the EBUS cable (1) to the radio receiver's connector (5) and to the EBUS terminal block on the main board (3). There is no polarity that must be respected.

Case n°3 - radio receiver outside the appliance

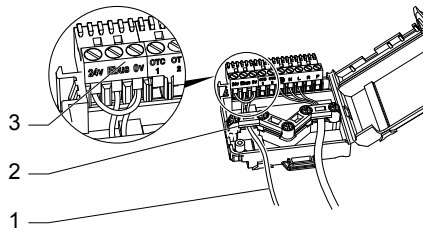

Legend
1 Ebus and 0V connection
2 Cable strain relief
3 Connector for the radio receiver

- Do not remove the link from the terminal block for connecting the main board’s room thermostat.
- Connect the EBUS cable to the radio receiver connector and the EBUS and 0V connection in the electrical cartridge. Polarity is not important.

8.3 Pairing (recognition)

8.3.1 The room thermostat delivered with a radio receiver

The pairing between the room thermostat and its radio receiver requires no action on your part. It is carried out in the factory.

8.3.2 The radio receiver with wireless outdoor sensor

Pairing between the external temperature probe and the radio receiver is possible (see the installation manual for the external probe).

The radio receiver can be paired with the wireless outdoor sensor (see the outdoor sensor installation manual).

9 Commissioning

9.1 Appliances included in the installation

- Switch on the appliances that make up the installation (see the installation manuals).

9.2 Room thermostat

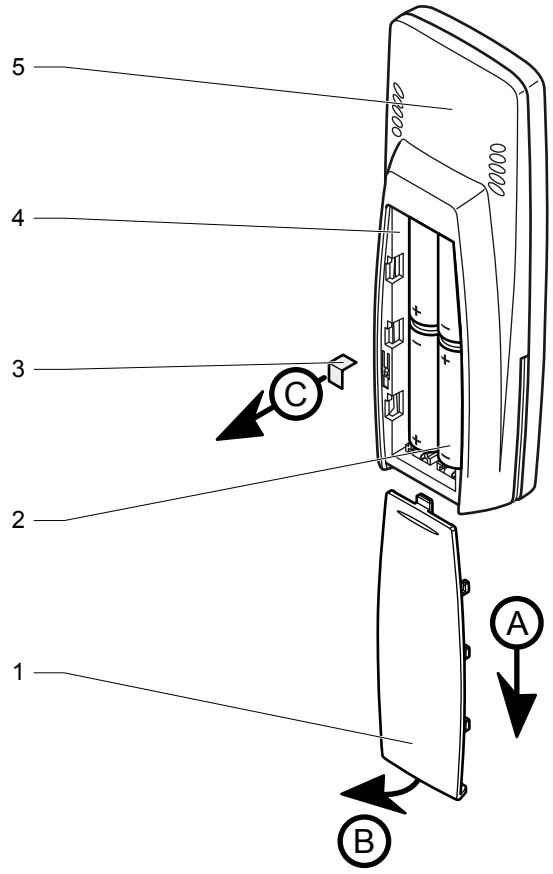

Legend
1 Battery cover
2 Batteries
3 Insulating strip
4 Battery compartment
5 Room thermostat

- Remove the insulating strip (3) located in the battery compartment, respecting the order of operations (A) to (C).
- Perform the pairing of the room thermostat based on your installation (see Chapter pairing).

10 Specific settings

Accessing the room thermostats installer menu allows for some adjustments to be made to the installation (room thermostat and remote sensor) and the room thermostat's user menu.

10.1 Main settings

Function	Title	Action
Heating	Maximum room temperature	Choose a value between 5 °C and 30 °C. (factory setting: 30 °C).
	Room temperature correction	Choose a value between -5 °C and 5 °C with a step of 0.5 °C. (factory setting: 0 °C).
	Modulating control	Activate (ON) or deactivate (OFF) (default setting: OFF).
Hot water	On/Off	Activate (ON) or deactivate (OFF) (default setting: ON).
	Maximum temperature of domestic hot water	Choose a value between 38 °C and 65 °C. (factory setting: 60 °C).
	Program	Enable (YES) or disable (NO) (default setting: ON).
Cooling function	On/Off	Activate (ON) or deactivate (OFF) (default setting: OFF).
	Program	Enable (YES) or disable (NO) (default setting: OFF).
Options (outdoor sensor)	Outside temperature correction	Choose a value between -5 °C and 5 °C with a step of 1 °C. (factory setting: 0 °C).
Adjustment possible only if an outdoor sensor is connected	Choosing the heating profile	Choose a value between 0.2 and 4. (factory setting: 2). See the instructions for the outdoor sensor connected to the appliance to carry out this adjustment. Note : the settings for the outdoor sensor made on the appliance will no longer be active.

10.2 Access to the installer menu

- Press button menu for 7 seconds.
- Enter the installer code 96.

10.3 Description of the installer menu

Menu	Browsing
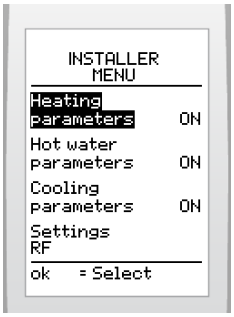	Use the buttons:
	Select with the button: ok
	Select with the button: - menu to return to the professional menu screen, - menu for 3 seconds to return to the user's main screen.

Showing, enabling and disabling of functions is reflected in the user menu.

10.4 Heating function

Menu	This menu lets you:
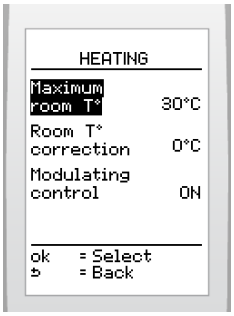	Set the maximum adjustable room temperature.
	Correct the measurement of the room temperature.
	Activate or deactivate the modulating control for the hot water temperature.

(*) automatic adjustment of the heating water temperature

10.4.1 To set the maximum room temperature

This function lets you adjust the maximum room temperature that can be set by the user (value adjustable between 5 and 30 °C - factory setting: 30 °C).

- From the installer menu (see access to the installer menu) > select on the screen > **heating** > **maximum room T°.**

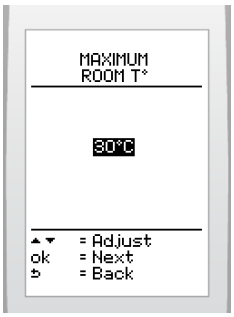

- Increase or decrease with the buttons to display the initial cooling temperature and press the button ok.

10.4.2 Correcting the room temperature

This function lets you rectify the temperature measured by the ambient temperature thermostat (by +/- 5 °C with a step of 0.5 °C - (factory setting : 0).

- From the installer menu (see access to the installer menu) > select on the screen > **heating** > **room temperature correction**

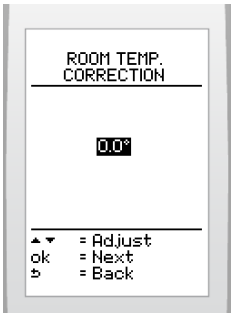

- Increase or reduce with the buttons to display the desired correction and validate with button ok.

10.4.3 Activating or deactivating the modulating control

This function lets you adapt the flow temperature in the heating system.

- From the installer menu (see access to the installer menu) > select on the screen > **heating** > **modulating control**

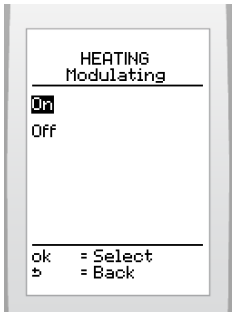

- Press to highlight your choice (On or Off) and press the button ok to confirm.

10.5 Domestic hot water function

Menu	This menu lets you:
	Show or hide the domestic hot water function in the end user menu
	Set the maximum domestic hot water temperature.
	Enable or disable the domestic hot water reheating program in the end user menu

10.5.1 The hot water function

This function lets you activate or deactivate the hot water menu for the user.

If the function is deactivated, the domestic hot water settings are adjusted via the appliance.

- From the installer menu (see access to the installer menu) > select on the screen > **hot water** > **on/off**

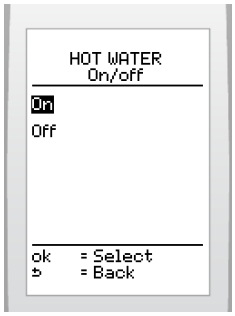

- Press to highlight your choice (activate or deactivate) and press the button ok to confirm.

10.5.2 Adjust the maximum domestic hot water temperature

This function lets you adjust the maximum hot water temperature that can be set by the user (value adjustable between 38 and 65 °C - factory setting: 60 °C).

- From the installer menu (see access to the installer menu) > select on the screen > **hot water** > **maximum temperature**

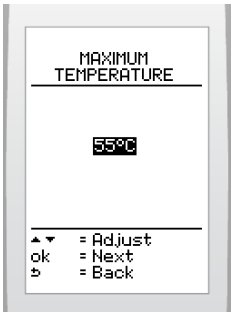

- Increase or reduce with the buttons to display the desired water temperature and validate with button ok.

10.5.3 To enable or disable the domestic hot water heating program

The hot water function must be activated before it can be programmed. Depending on the appliance, deactivation cuts off the hot water heating as well as the production of hot water (see the appliances installation manual).

This function makes it possible to allow the user to program domestic hot water reheating.

- From the installer menu (see access to the installer menu) > select on the screen > **hot water** > **enable program**

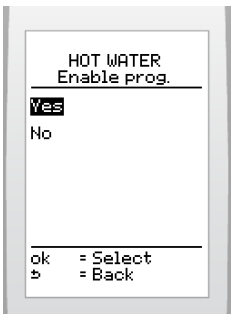

- Press to highlight your choice (enable or disable) and press the button ok to confirm.

10.6 Cooling function

Menu	This menu lets you:
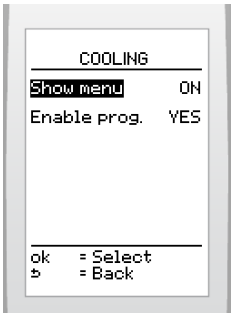	Activate or deactivate the cooling function in the end user menu.
	Enable or disable the cooling program in the end user menu.

10.6.1 Activate or deactivate the cooling function

This function allows the user to activate or deactivate the cooling menu.

- From the installer menu (see access to the installer menu) > select on the screen > **cooling** > **on/off**

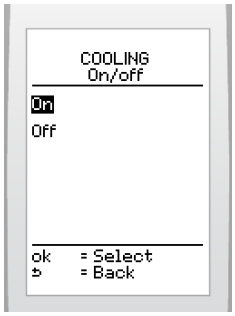

- Press to highlight your choice (activate or deactivate) and press the button ok to confirm.

10.6.2 Enable or disable the cooling program

The cooling function must be activated before it can be programmed.

This function makes it possible to allow the user to program cooling.

- From the installer menu (see access to the installer menu) > select on the screen > **cooling** > **enable program**

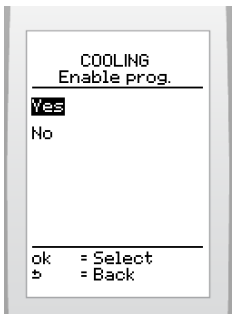

- Press to highlight your choice (enable or disable) and press the button ok to confirm.

10.7 Options

Menu	This menu lets you:
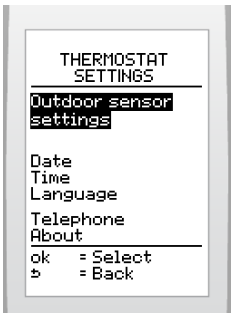	Configure the wireless outdoor sensor: - for correcting the measured outside temperature, - for choosing the heating curve (see the instructions for the wireless outdoor sensor).
	Adjust the date and time
	Choose the language
	Enter the telephone number that will be displayed in after-sales service messages.
	Display information: zone, type and software version for the room thermostat

10.7.1 Outdoor sensor settings

Correcting the outside temperature

This function lets you rectify the temperature measured by the room thermostat (by +/- 5 °C with a step of 1 °C - factory setting: 0).

- From the installer menu (see access to the installer menu) > select on the screen > **settings** > **outdoor sensor settings** > **outside T^O correction**

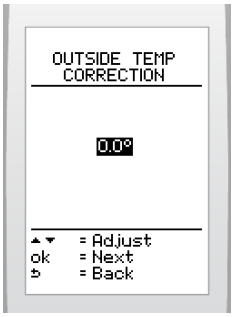

- Increase or reduce with the buttons to display the desired correction and validate with button ok.

Choosing the heating curve (gradient)

This function lets you choose the heating profile (value adjustable between 0.2 and 4 - factory setting: 1.6).

- See the installation manual for the outdoor sensor.
- From the installer menu (see access to the installer menu) > select on the screen > **settings** > **outdoor sensor settings** > select **heating curve**

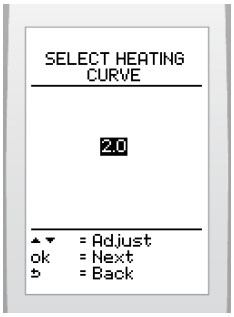

- Using the buttons, select the desired heating profile and validate with the ok button.

10.7.2 Setting the current date

- From the installer menu (see access to the installer menu) > select on the screen > **settings** > **date**

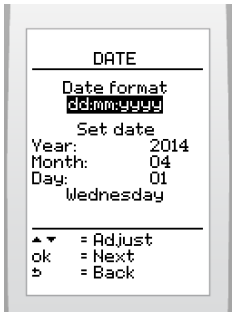

- Set the display format of the current date by pressing and pressing ok to confirm. There is a choice between the factory setting day/month/year and year/month/day.

- Set the current date by pressing and pressing the button ok to confirm.

10.7.3 Setting the current time

- From the installer menu (see access to the installer menu) > select on the screen > **settings** > **language**

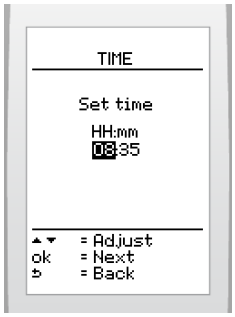

- Set the time by pressing and pressing the button ok to confirm.

10.7.4 Choose the language for the menus

- From the installer menu (see access to the installer menu) > select on the screen > **settings** > **language**

To display the additional languages:

- From the installer menu (see access to the installer menu) > select on the screen > **other**

- Choose the language with the button and press the button ok to confirm.

10.7.5 Telephone After-Sales Service

This function lets you specify the telephone number that will be displayed in after-sales service messages from the room thermostat.

- From the installer menu (see access to the installer menu) > select on the screen > **settings** > **telephone**

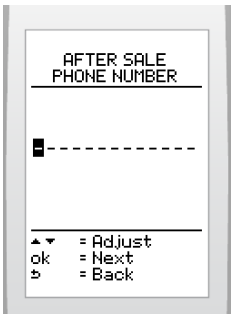

- Display the desired number with the buttons and validate with the ok button.

- Validate the dashes following the telephone number with the ok button.

10.7.6 General information on Climapro$_2$ RF

This feature allows you to display the following information: area, software type and version.

- From the installer menu (see access to the installer menu) > select on the screen > **settings** > **about**

10.8 Radio

Menu	This menu lets you:
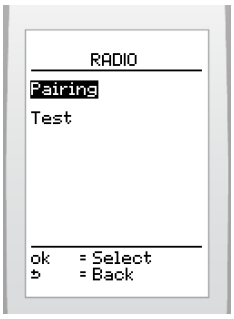	Establish the connection between the radio receiver and the room thermostat.
	Test the quality of the radio signal (thermostat and wireless outdoor sensor).

10.8.1 Pairing

This function lets you perform the pairing between the thermostat and the radio receiver.

- From the installer menu (see access to the installer menu) > select on the screen > **RF** > **pairing**

10.8.2 Test

This function lets you test the quality of the signal between the room thermostat and the radio receiver.

In the case where a wireless outdoor sensor is included in the heating system, the room thermostat will also indicate the quality of the signal between the outdoor sensor and the radio receiver.

Wait about fifteen minutes after activating the thermostat and the outdoor sensor before testing.

Signal Quality	Comment
Excellent	Normal functioning
Average	
Poor	Operating limit*
Null	Inoperative*

(*) Check the room thermostat's batteries (see the instructions). If the signal quality does not improve. Change the location of the appliances, reducing distances and removing obstacles.

- From the installer menu (see access to the installer menu) > select on the screen > **RF** > **test**

11 Control / Commissioning

After installing the room thermostat:

- Turn on the appliance according to the operating instructions and check for correct operation.

12 User information

At the end of the installation:

- explain the operation of the appliance and its safety devices to the user, if necessary provide a demonstration and answer any questions;
- give the user all the required documentation,
- fill in the documents where necessary;
- advise the user of the precautions necessary to prevent damage to the system, appliance and the building;
- remind the user to service the appliance annually.

MAINTENANCE

13 Fault diagnosis

In case the signal is lost between the room thermostat and the radio receiver (e.g. : batteries exhausted), the heating system uses its own functioning settings.

Faults described in this chapter should be carried out by a qualified engineer and if needed by the After Sales Service.

You will find a list of certain error codes in the user manual.

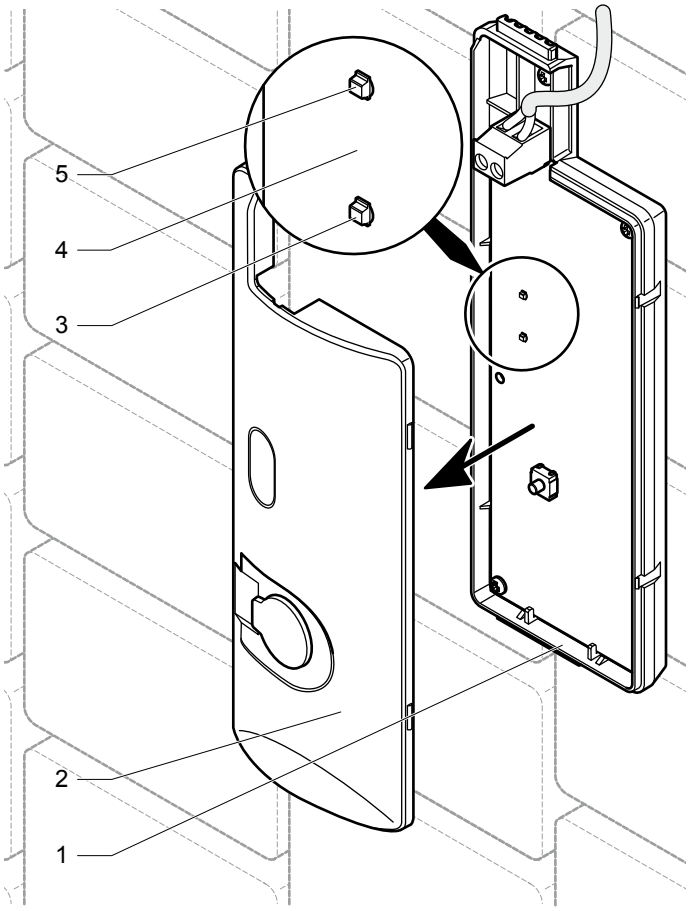

Legend
1 Radio receiver
2 Cover for radio receiver
3 Red LED
4 Radio receiver circuit board
5 Green LED

In the event of a problem:

- Check the error messages in the room temperature thermostat's display zone
- Remove the cover (2) from the radio receiver (1) to see the 2 LEDs.
- Check the state of the 2 LEDs (green (5) and red (3) located on the electronic board (4) in the radio receiver.

Radio receiver	Cause	Solution
Green LED off Red LED off	- Failure of electrical supply - Defective EBUS connection cable	• Ensure that there is no interruption to the electricity supply and that the appliance is properly connected and turned on. • Check the electrical connection between the receiver and the appliance.
Red LED switched on	- Appliance fault - Radio signal transmission error - EBUS communications error - Defective radio transmitter or receiver - EBUS connecting cable defective	• Check that: - The appliances functioning status is correct - The room thermostat batteries are properly installed in their compartment - The battery polarity is not reversed - The batteries are not exhausted. If so, replace with new batteries. • Check the electrical connection between the receiver and the appliance. • Check the radio communication between the thermostat and the receiver.

TECHNICAL DATA

14 Climapro$_2$ RF

Description	Unit	Climapro$_2$ RF
Transmission/reception frequency	MHz	868
Transmission/reception frequency between the outdoor sensor and the room thermostat	min	15
Transmission/reception frequency between the appliance and the room thermostat	min	10
Average unobstructed working range (*)	m	100
Average range within the home (*)	m	25
(*) Can vary according to installation conditions and electromagnetic environment		
Room thermostat		
Room temperature authorized in the room where the control is installed	°C	50
Maximum authorised temperature of domestic water	°C	65
Dimensions:		
Height	mm	173
Width	mm	62,5
Depth	mm	34
Supply: 4 “AA LR6 " alkaline batteries	V	4 x 1.5
Battery life (**)	month	18
(**) Under normal conditions of use		
Room thermostat support		
Dimensions :		
Height	mm	58
Width	mm	66
Depth	mm	27
Spacing between the room thermostat (in support) and the wall	mm	6

15 Radio receiver

Description	Unit	Radio receiver
Transmission/reception frequency	MHz	868
Transmission/reception frequency between the outdoor sensor and the room thermostat	min	15
Transmission/reception frequency between the appliance and the room thermostat	min	10
Average unobstructed working range (*)	m	100
Average range within the home (*)	m	25
(*) Can vary according to installation conditions and electromagnetic environment		
Radio receiver		
Dimensions :		
Height	mm	20
Width	mm	171
Depth	mm	58
Power-supply voltage EBUS	V	24V
Electrical connection cable section	mm²	2 x 0.75
Max. length of electric connection cables	m	300

0020094586_01 - 08/10

Because of our constant endeavour for improvement, details may vary slightly from those shown in these instructions.

Glow-worm, Nottingham Road, Belper, Derbyshire. DE56 1JT