BRISTAN

Installation Instructions & User Guide

Please leave these instructions with the end user

Product Code: SAI SHCDIV BB (D2)

Specifications

Dynamic Water Pressure

Min: 0.2 bar **Max:** 5.0 bar

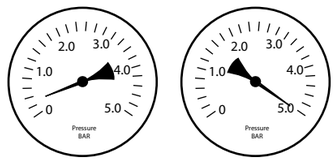

Maximum Static Pressure: 10.0 bar

Inlet Water Temperature

Cold Water Supply

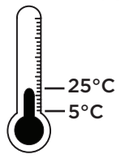

Min: 5°C **Max:** 25°C

Hot Water Supply

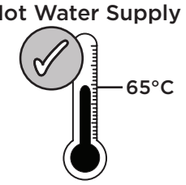

65°C Recommended

IMPORTANT The inlet hot water must be at least 10°C above the required blend temperature.

Inlet Dimensions

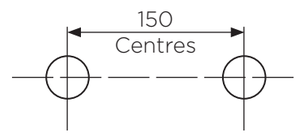

Inlet Connections

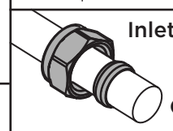

15mm Compression

Tools You'll Need

Socket Spanner · Cross Head Screwdriver · Drill · Adjustable Spanner · Pipe Cutter · Silicon Sealant · Hexagonal Keys · Pipe & Wire Detector · Spirit Level

Prior to Installation

All products manufactured and supplied by Bristan are safe to use provided that they are installed, operated and receive regular maintenance in accordance with these instructions.

This product needs to be installed in accordance with, and meet the requirements of the Water Supply (Water Fittings) Regulations 1999 and current by-laws. For full Installation Requirements & Notes (IRN) please visit **wras.co.uk/directory.**

Isolation valves must be fitted to the inlet water supplies to ensure ease of future maintenance. Before installing this product the water supply must be thoroughly flushed in order to remove any swarf, solder etc. Full access must be made available for future maintenance/ servicing purposes.

Before drilling into walls, check that there are no hidden electrical wires, cables or water supply pipes. This can be checked with the aid of an electronic detector.

If power tools are used do not forget to:
- Wear eye protection
- Unplug equipment after use

This product must not be modified in any way as this will invalidate the guarantee.

If in doubt, contact a registered plumber, your Local Water Authority or the Secretary of the Institute of Plumbing, address as follows:-

The Institute of Plumbing,
64 Station Lane,
Hornchurch,
Essex,
RM12 6NB, Tel: 01708 472791

Cavity Dimensions (mm)

Minimum Fitting Depth: 60mm

Maximum Fitting Depth: 75mm

Concealing Plate Adjustment Range: 15mm

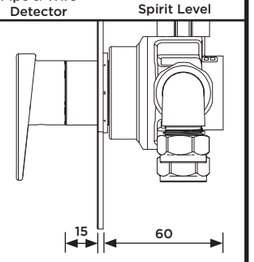

Pack Contents

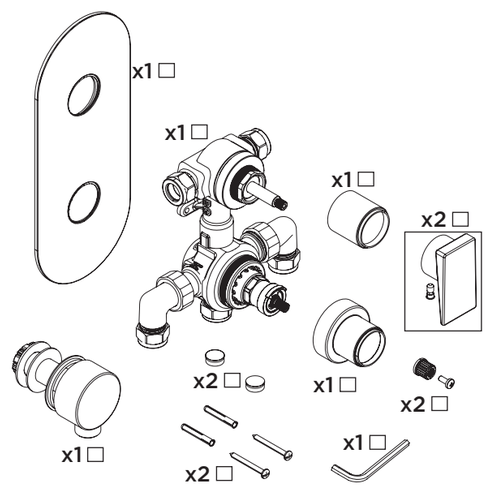

Valve Configuration

1

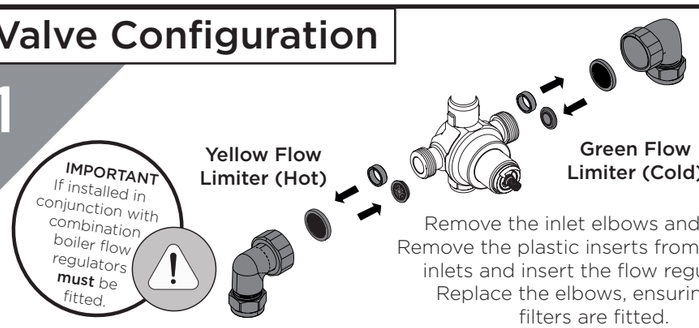

Remove the inlet elbows and filters. Remove the plastic inserts from the valve inlets and insert the flow regulators. Replace the elbows, ensuring the filters are fitted.

2

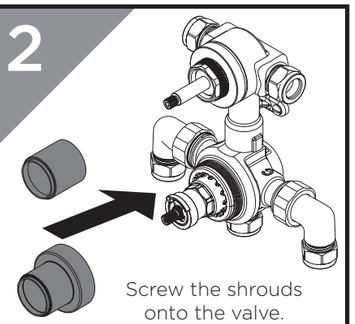

Screw the shrouds onto the valve.

Installation

1

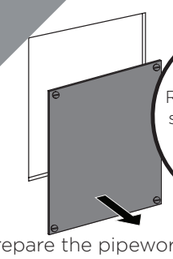

Prepare the pipework. Create the rear access point in the back of the wall cavity.

2

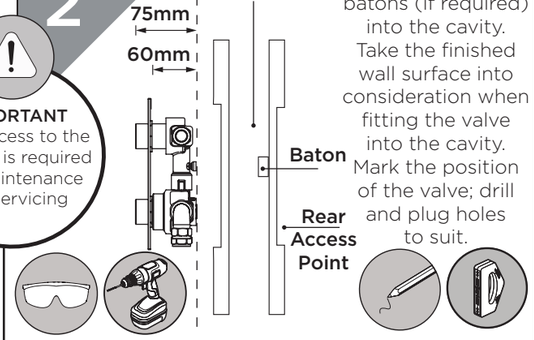

Install suitable batons (if required) into the cavity. Take the finished wall surface into consideration when fitting the valve into the cavity. Mark the position of the valve; drill and plug holes to suit.

3

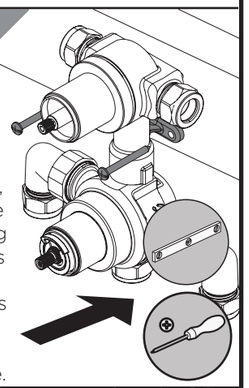

Ensuring the valve is straight, secure the valve using the screws supplied (solid walls only) or a suitable alternative.

4

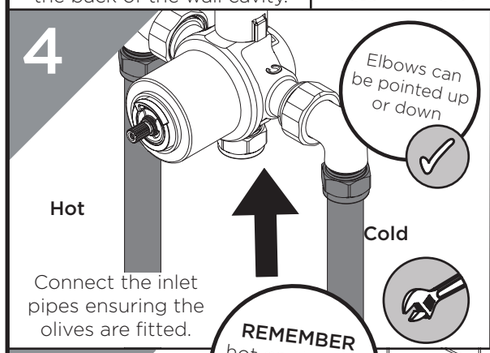

Connect the inlet pipes ensuring the olives are fitted.

5

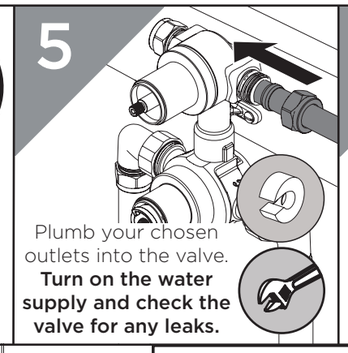

Plumb your chosen outlets into the valve. **Turn on the water supply and check the valve for any leaks.**

6

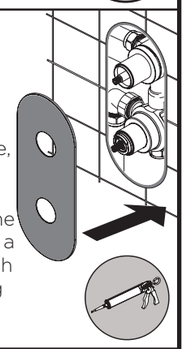

Draw around the concealing plate as a template, measuring in by 10mm to give clearance. Finish the wall surface. Using a silicon sealant, push on the concealing plate and hold firmly until set.

7

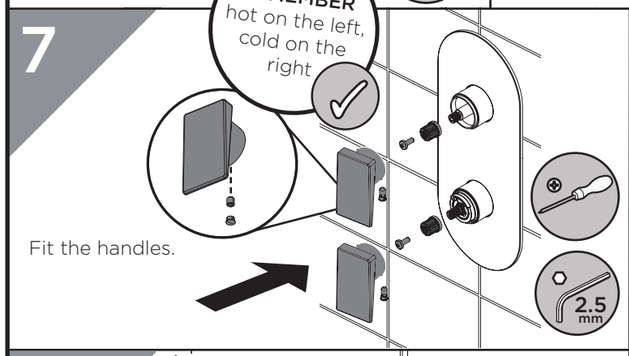

Fit the handles.

Temperature Adjustment

1

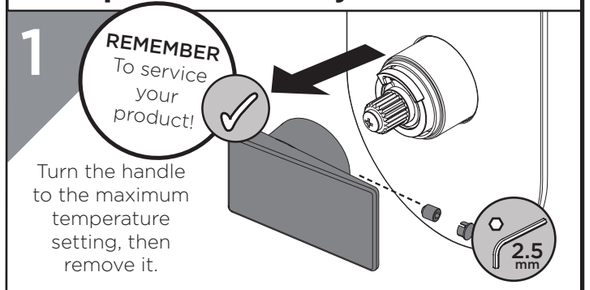

Turn the handle to the maximum temperature setting, then remove it.

2

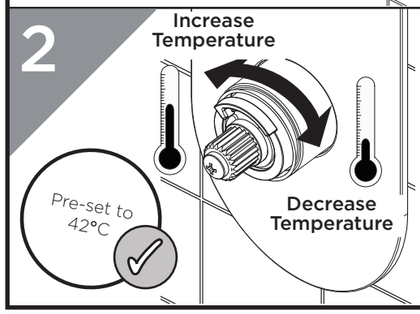

Turn the spindle to increase or decrease the temperature. Check the temperature and adjust until you achieve the desired result.

3

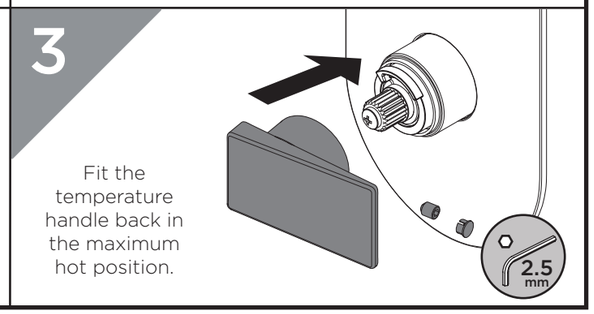

Fit the temperature handle back in the maximum hot position.

General Cleaning

Bristan products are made from premium materials, with hand polished, PVD, EPD or electroplated finishes.

Your shower should be regularly cleaned with warm water, a mild pH-neutral liquid soap, and polished with a soft cloth. Any residues from soap, toothpaste, shampoos and shower gels can cause blemishes if not rinsed off straight after use.

Household bleaches and cleaners contain harsh chemicals and may damage the surface finish. Avoid using abrasive cloths, scouring pads, scrub sponges, steel wool or anything similar.

Operation

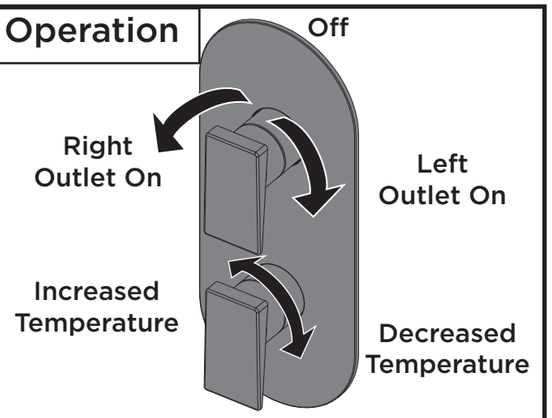

Wall Outlet Installation

Choose the location for the wall outlet and create a 25-30mm hole in the wall. Ensure your shower accessories have enough reach from that position. Finish the wall surface.

With rear access

Fit the wall outlet, ensuring the washers are fitted either side of the wall.

Go to Step 5 in the Installation Steps.

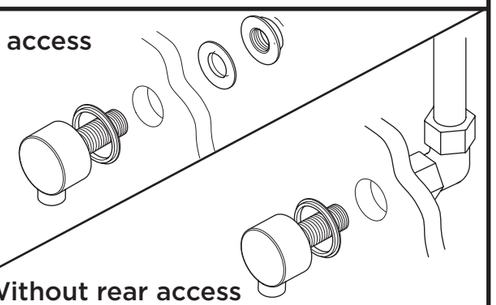

Without rear access

Follow Step 5 in the Installation Steps, fitting a 1/2" female connection at the hole in the wall (not supplied).

Screw the wall outlet into the 1/2" female connection, using a suitable thread sealant ensuring the rubber seal is fitted to the back of the wall outlet.

Servicing Intervals

To reduce the build up of lime scale and to ensure this shower works to its maximum performance we recommend this shower is serviced every 6-12 months depending on the hardness of your water.

Maintenance - Cartridge Cleaning

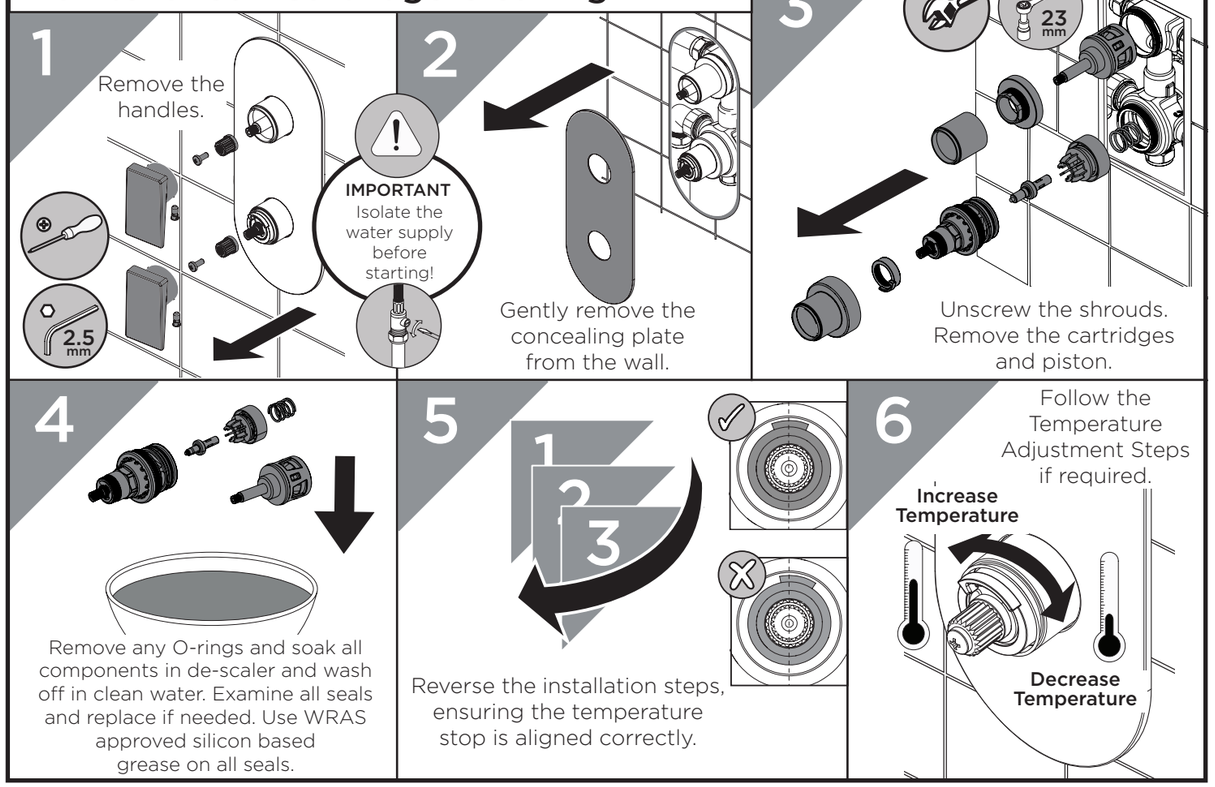

Troubleshooting

Symptom	Cause	Remedy
No flow or low flow rate	Partially closed isolation valve.	Open isolation valve.
	Instantaneous water heater cycles on and off as flow rate or pressure is too low.	Increase water flow rate or pressure through system.
	Head of water is below the minimum distance required.	Refer to the specification for the minimum distance required.
	Are the water supply pressures balanced?	If pressures are unbalanced, a pressure reducing valve should be used for optimum performance.
	Hot or cold water being drawn off elsewhere causing pressure changes or instantaneous boiler temperature changes.	Do not use other water outlets when using the shower.
	Airlock or partial blockage in the supply pipework.	Flush through pipework and filters to ensure removal of debris and any airlocks.
	Hot/Cold water supply has failed	Check the hot and cold feeds. The shower will not work if either fails.
Maximum Water Temperature too Hot/Cold	Maximum Water Temperature needs adjusting.	Refer to the Temperature Setting section to set your desired maximum temperature.
Outlet Water Temperature too Hot/Cold	Filter/pipe blockage	Flush through pipework and filters to ensure removal of debris and any airlocks.
	Installtion conditions outside operating parameters.	Refer to the specification for the minimum distance required.
	Hot water temperature is less than 10°C above the required blend temperature	Adjust hot water temperature or wait for water to reheat if a stored water system is used.
	Instantaneous water not igniting because the water flow rate is too low.	Increase water flow rate through the system. Refer to the Maintenance section to clean/check the cartridge and filters for any damage. Contact your boiler manufacturer.
	Instantaneous water not igniting because the water pressure is too low.	Refer to the specification for system requirements. Increase water pressure through the system. Contact your boiler manufacturer.
Only hot/ cold water from Shower Valve	Inlet water supplies are reversed.	Check the water inlet connections are the correct way around: Hot on the left, Cold on the right when viewed from the front. Rework pipework as necessary.
	Filter/pipe blockage	Flush through pipework and filters to ensure removal of debris and any airlocks.
Water dripping from shower	This is normal for a short time after using the shower.	This is caused by residual water tension, the build up of water in the shower.
	If water continues to drip, possibly due to the cartridge	Remove cartridge and clean, refer to 'Maintenance' section before starting any maintenance.
Shower does not turn on	Closed isolation valve.	Open isolation valve.
	Mains water supply turned off.	Turn on mains water supply.

Our Guarantee

At Bristan, we want to make things as easy as possible for our customers. That's why we offer solid guarantees on all our products, effective from the date of purchase, to give you peace of mind.

To start your free guarantee simply scan the QR code and register your product. Alternatively visit **www.bristan.com/register.**

UK: Bristan Group, B78 1SG.
Customer Service: +44330 026 6273
Web: www.bristan.com
Email: enquire@bristan.com

EU: FM Mattsson AB (publ)
Box 480
SE-792 27 Mora
Sweden
Email: info@fmmattssongroup.com

arantees.

026 6273
an.com
ristan.com

BRISTAN

BRISTAN

Installation Instructions & User Guide

Please leave these instructions with the end user

ARM WASQ01 BB (D2)

Specifications

Dynamic Water Pressure

Min: 0.2 bar **Max:** 5.0 bar

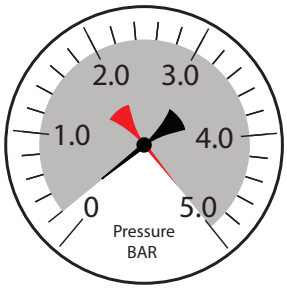

Maximum Static Pressure: 10.0 bar

Inlet Water Temperature

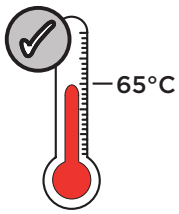

Maximum Hot 65°C

IMPORTANT

The inlet hot water must be at least 10°C above the require blend temperature.

Inlet Connections

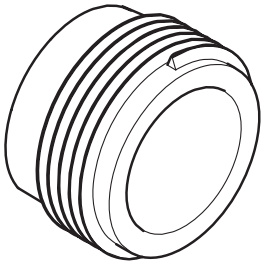

1/2" BSP

Pack Contents

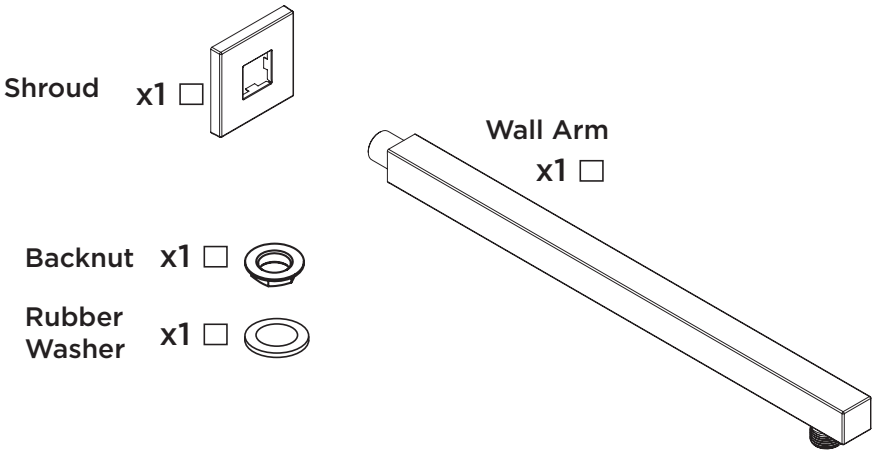

Tools Required for Installation

Pipe Cutter | Pencil | Adjustable Spanner | Drill | PTFE Tape | Safety Goggles | Electronic Detector

Prior to Installation

All products manufactured and supplied by Bristan are safe to use provided that they are installed, operated and receive regular maintenance in accordance with these instructions.

This product needs to be installed in accordance with, and meet the requirements of The Water Supply (Water Fittings) Regulations (Northern Ireland) 2009 and The Water Supply (Water Fittings) (Scotland) Byelaws 2014. For full Installation Requirements & Notes (IRN) please visit www.wrasapprovals.co.uk/approvals-directory

Isolation valves must be fitted to the inlet water supplies to ensure ease of future maintenance. Before installing this product the water supply must be thoroughly flushed in order to remove any swarf, solder etc. Full access must be made available for future maintenance/servicing purposes.

If power tools are used do not forget to: - Wear eye protection - Unplug equipment after use

This product must not be modified in any way as this will invalidate the guarantee.

Spare Parts

To replace any spare parts for your tap, why not scan the QR Code or visit **www.bristan.com** and search for your product.

Installation

PLEASE NOTE - Products shown in these instructions are for illustration purposes only. Your product can still be installed by following these instructions.

1

Thread the arm through the wall.

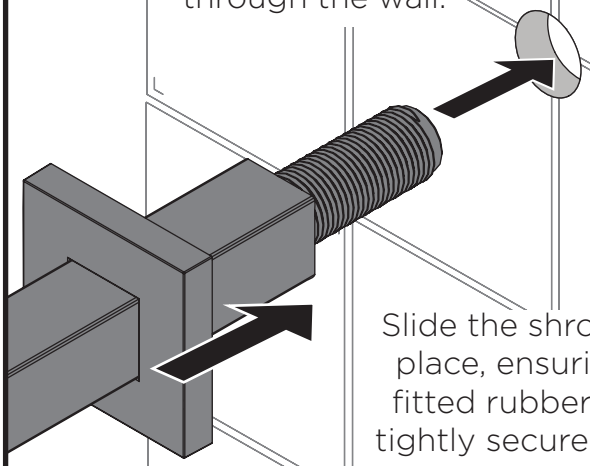

Slide the shroud into place, ensuring the fitted rubber seal is tightly secured to the inside.

2

Place the rubber washer followed by the backnut onto the threaded connection.

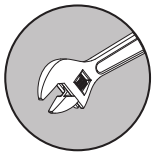

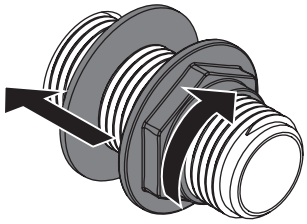

Slide the washer towards the wall and tighten the backnut.

Ensure the arm is stable and secured in place.

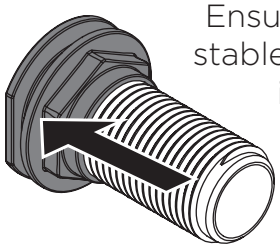

3

Connect the outlet pipework to the shower arm using a suitable connector (not supplied).

The supply pipework to the shower valve must be rigid and secured in position with the use of pipe clamps.

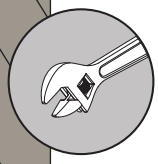

4

Screw the shower head onto the wall arm by **HAND ONLY.**

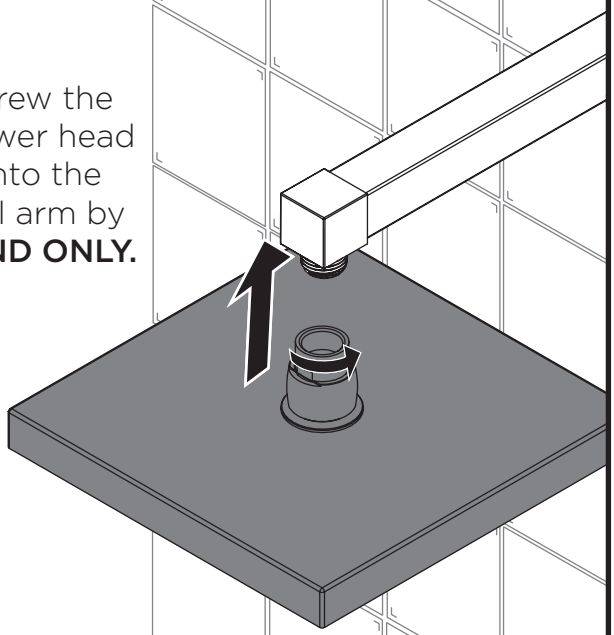

Turn on the water supply and check all joints and connections for any leaks.

Alternative Installation

PLEASE NOTE - Products shown in these instructions are for illustration purposes only. Your riser outlet can still be installed by following these instructions.

1

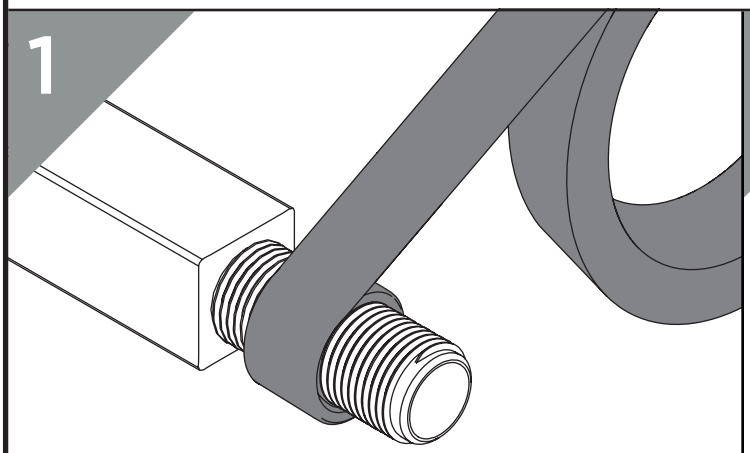

Use a suitable sealant that is compliant with UK Water Regulations around the thread.

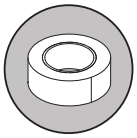

2

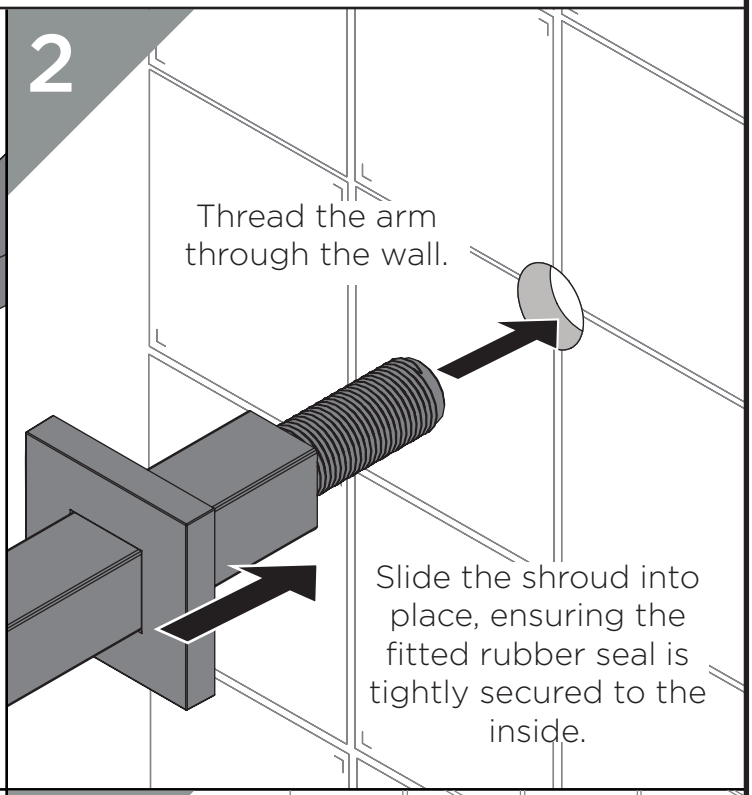

3

Connect the outlet pipework to the shower arm using a suitable connector (not supplied).

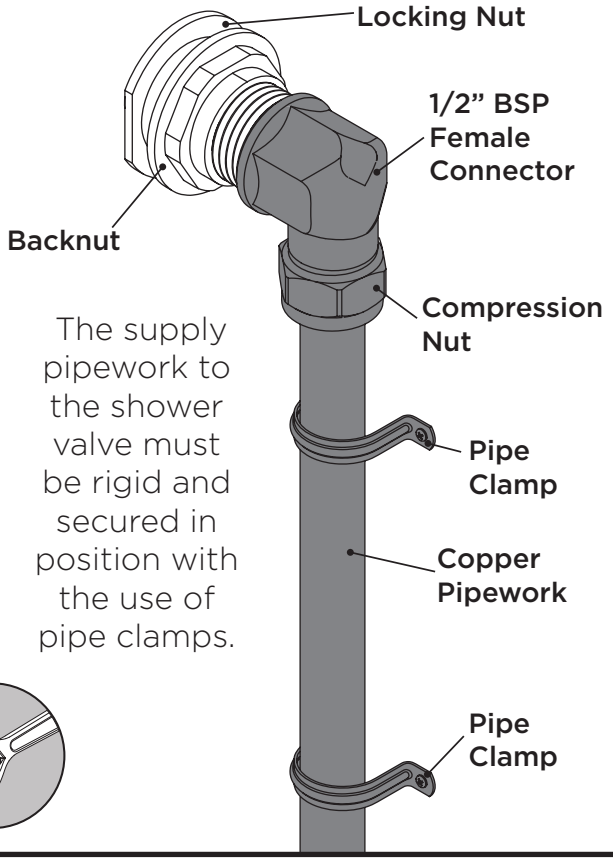

The supply pipework to the shower valve must be rigid and secured in position with the use of pipe clamps.

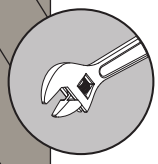

4

Screw the shower head onto the wall arm by **HAND ONLY.**

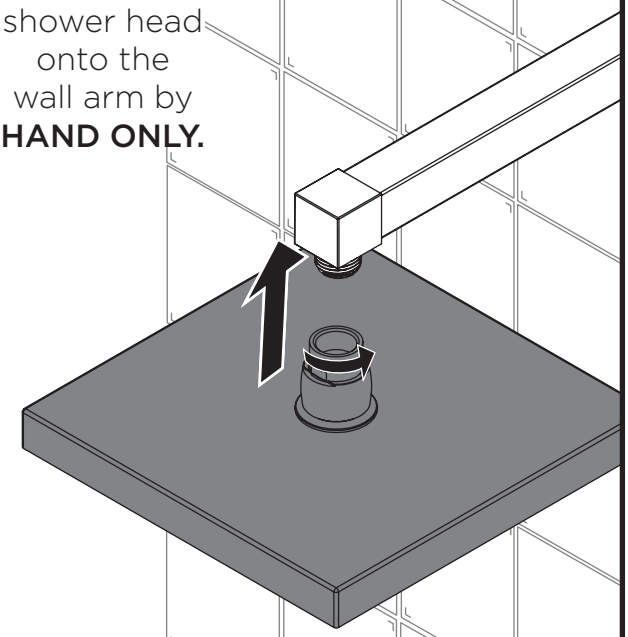

Turn on the water supply and check all joints and connections for any leaks.

Cleaning

General Cleaning

Bristan products are made from premium materials, with hand polished, PVD, EPD or electroplated finishes. Your product should be regularly cleaned with warm water, a mild pH-neutral liquid soap, and polished with a soft cloth. Any residues from soap, toothpaste, shampoos and shower gels can cause blemishes if not rinsed off straight after use.

Household bleaches and cleaners contain harsh chemicals and may damage the surface finish. Avoid using abrasive cloths, scouring pads, scrub sponges, steel wool or anything similar.

Cleaning The Shower Head

The hardness of the water in your area will determine how often you should clean your shower head. Build up of scale in particularly hard water areas combined with constant use means you may need to clean your shower head weekly. To ensure continued performance, the shower head needs to be regularly de-scaled.

UK: Bristan Group, B78 1SG.
Customer Service: +44330 026 6273
Web: www.bristan.com
Email: enquire@bristan.com

EU: FM Mattsson AB (publ)
Box 480
SE-792 27 Mora
Sweden
Email: info@fmmattssongroup.com

BRISTAN

Part of BRISTAN GROUP

enquire@bristan.com
www.bristan.com
+44330 026 6273

BRISTAN

Installation Instructions & User Guide

Please leave these instructions with the end user

FH SLSQ01 BB (D1)

Specifications

Dynamic Water Pressure

Min: 0.2 bar **Max:** 5.0 bar

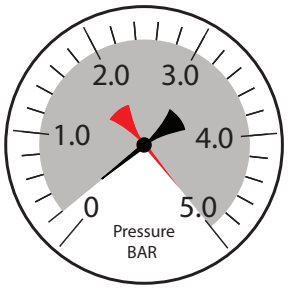

Maximum Static Pressure: 10.0 bar

Inlet Water Temperature

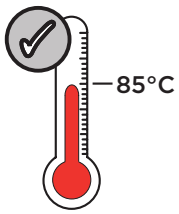

Maximum Hot 85°C

IMPORTANT

The inlet hot water must be at least 10°C above the require blend temperature.

Inlet Connections

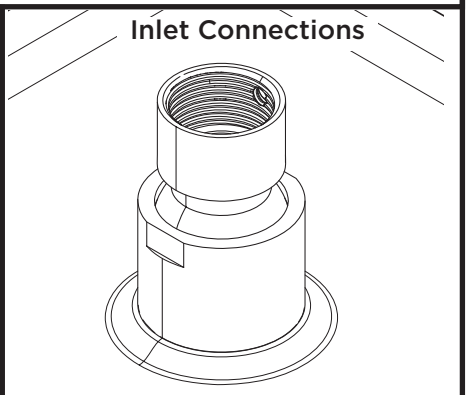

1/2" BSP (female)

Pack Contents

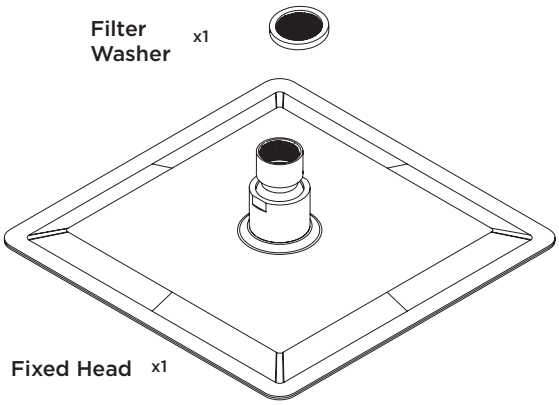

Operation

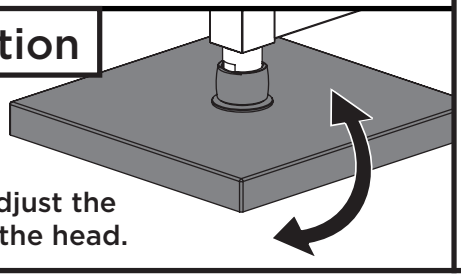

Tilt to adjust the angle of the head.

Installation

Products shown in these instructions are for illustration purposes only. Your shower can still be installed and operated by following these instructions.

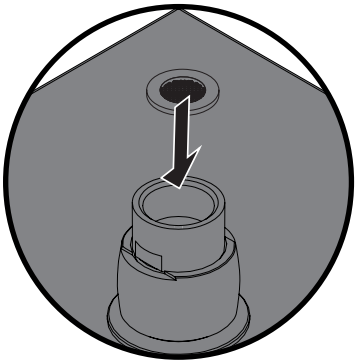

Ensure the filter washer is correctly inserted into the fixed head.

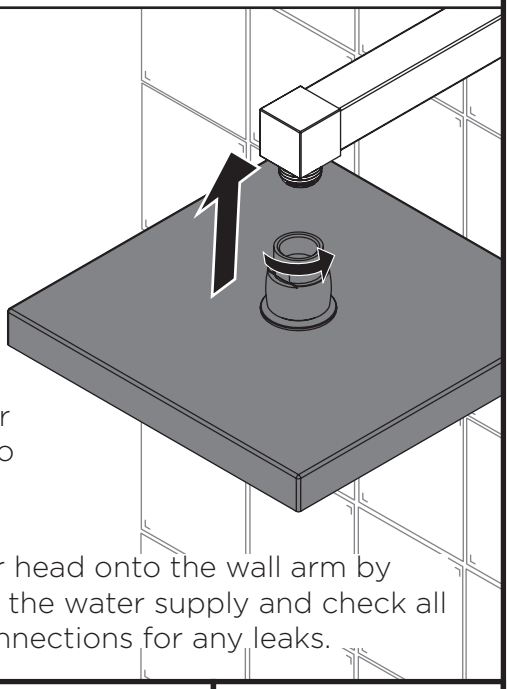

Screw the shower head onto the wall arm by **HAND ONLY.** Turn on the water supply and check all joints and connections for any leaks.

Prior to Installation

All products manufactured and supplied by Bristan are safe to use provided that they are installed, operated and receive regular maintenance in accordance with these instructions.

This product needs to be installed in accordance with, and meet the requirements of The Water Supply (Water Fittings) Regulations (Northern Ireland) 2009 and The Water Supply (Water Fittings) (Scotland) Byelaws 2014. For full Installation Requirements & Notes (IRN) please visit www.wrasapprovals.co.uk/approvals-directory

Isolation valves must be fitted to the inlet water supplies to ensure ease of future maintenance. Before installing this product the water supply must be thoroughly flushed in order to remove any swarf, solder etc. Full access must be made available for future maintenance/servicing purposes.

If power tools are used do not forget to: - Wear eye protection - Unplug equipment after use

This product must not be modified in any way as this will invalidate the guarantee.

Spare Parts

To replace any spare parts for your tap, why not scan the QR Code or visit **www.bristan.com** and search for your product.

Cleaning

General Cleaning

Bristan products are made from premium materials, with hand polished, PVD, EPD or electroplated finishes. Your product should be regularly cleaned with warm water, a mild pH-neutral liquid soap, and polished with a soft cloth. Any residues from soap, toothpaste, shampoos and shower gels can cause blemishes if not rinsed off straight after use.

Household bleaches and cleaners contain harsh chemicals and may damage the surface finish. Avoid using abrasive cloths, scouring pads, scrub sponges, steel wool or anything similar.

Cleaning The Shower Head

Your Bristan shower head is equipped with rub-clean nozzles for easy cleaning. Simply rub your fingers across the rubber spray jets regularly and before you turn the shower on to remove and scale or debris.

The hardness of the water in your area will determine how often you should clean your shower head. Build up of scale in particularly hard water areas combined with constant use means you may need to clean your shower head weekly. To ensure continued performance, the shower head needs to be regularly de-scaled.

UK: Bristan Group, B78 1SG.
Customer Service: +44330 026 6273
Web: www.bristan.com
Email: enquire@bristan.com

EU: FM Mattsson AB (publ)
Box 480
SE-792 27 Mora
Sweden
Email: info@fmmattssongroup.com

BRISTAN

Part of BRISTAN GROUP

enquire@bristan.com
www.bristan.com
+44330 026 6273

BRISTAN

Installation Instructions & User Guide

Please leave these instructions with the end user

SQR KIT01 BB (D2)

Specifications

Dynamic Water Pressure

Min: 0.2 bar **Max:** 5.0 bar

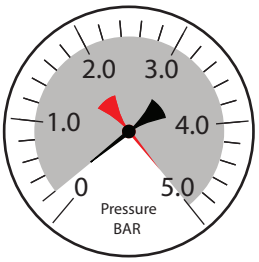

Maximum Static Pressure: 10.0 bar

Tools Required

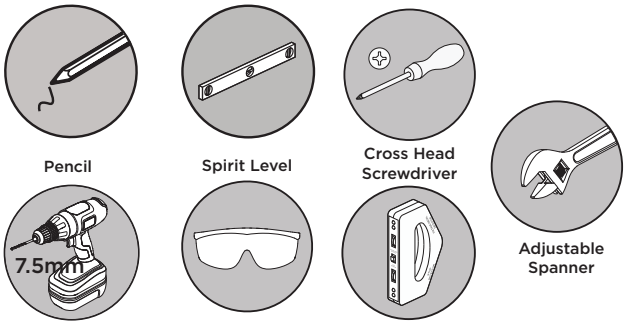

Inlet Connections

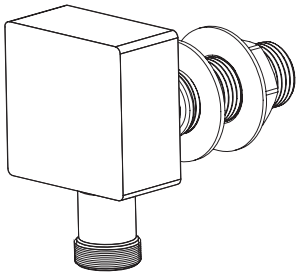

1/2" BSP

Pack Contents

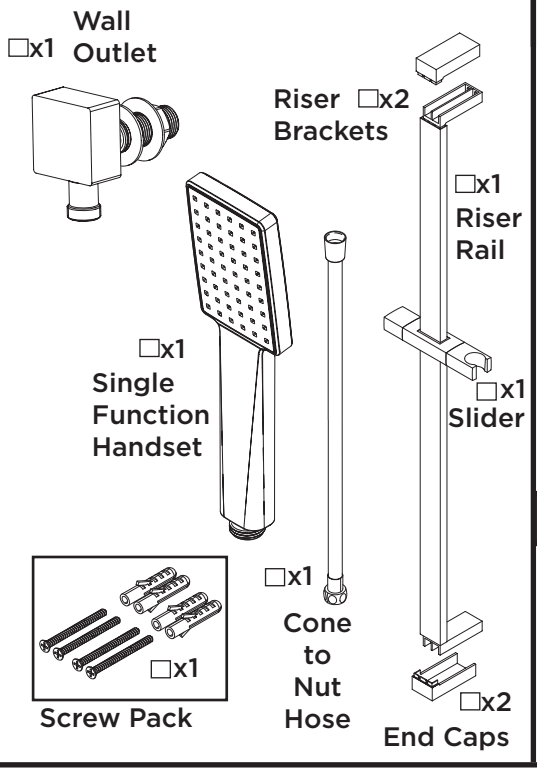

Operation

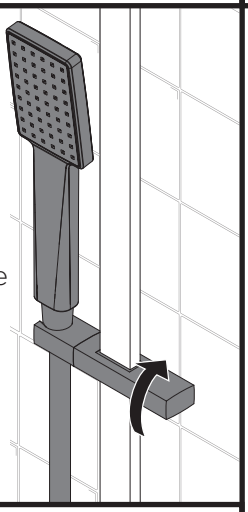

Twist the button to release the lock.

Adjust to the necessary height and return to the straight position to lock.

Spares

To replace any spare parts for your shower, why not scan the QR Code or visit **www.bristan.com** and search for your product.

Dimensions (mm)

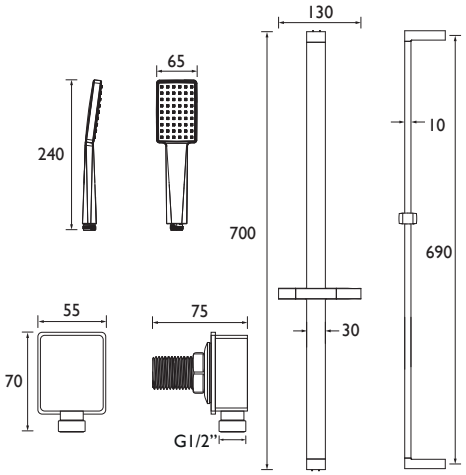

Prior to Installation

All products manufactured and supplied by Bristan are safe to use provided that they are installed, operated and receive regular maintenance in accordance with these instructions.

This product needs to be installed in accordance with, and meet the requirements of The Water Supply (Water Fittings) Regulations (Northern Ireland) 2009 and The Water Supply (Water Fittings) (Scotland) Byelaws 2014. For full Installation Requirements & Notes (IRN) please visit **www.wrasapprovals.co.uk/approvals-directory**

Full access must be made available for future maintenance/servicing purposes. This product must not be modified in any way as this will invalidate the guarantee.

Before drilling into walls, check that there are no hidden electrical wires, cables or water supply pipes.
This can be checked with the aid of an electronic detector. If power tools are used do not forget to:
- Wear eye protection
- Unplug equipment after use

BRISTAN

Installation Instructions and User Guide

Adjustable Riser Kits

Please keep this booklet for future reference.

Installer, when you have read these instructions please ensure you leave them with the user.

Contents

Thank you for choosing Bristan, the UK's leading taps and showers expert. We have designed these products with your enjoyment in mind. To ensure that they work to their full potential, they need to be fitted correctly. These fitting instructions have been created to give you all of the information you need and, if you need any further help, please do not hesitate to give us a call on 0330 026 6273.

Contents

- Important Safety Information **3**
- Prior to Installation **4**
- Installation - Riser with Moulded Brackets **5-6**
- Installation - Brackets with Fixing Plates **6-7**
- Installation - Shrouded Brackets **8**
- Installation - Wall Outlets **9**
- General Cleaning **9**
- Troubleshooting **10**
- Notes **11**

Important Safety Information

All products manufactured and supplied by Bristan are safe to use provided that they are installed, operated and receive regular maintenance in accordance with these instructions.

This product needs to be installed in accordance with, and meet the requirements of the Water Supply (Water Fittings) Regulations 1999 and current by-laws.
For full Installation Requirements & Notes (IRN) please visit
www.wrasapprovals.co.uk/approvals-directory

This product must not be modified in any way as this will invalidate the guarantee.

Full access must be made available for future maintenance/servicing purposes.

Before drilling into walls, check that there are no hidden electrical wires, cables or water supply pipes. This can be checked with the aid of an electronic detector.

If power tools are used do not forget to:

- Wear eye protection

- Unplug equipment after use

If in doubt, contact a registered plumber or your Local Water Authority or the Secretary of the Institute of Plumbing, address as follows:-

The Institute of Plumbing,
64 Station Lane,
Hornchurch,
Essex,
RM12 6NB, Tel: 01708 472791

Prior to Installation

The installation images are for illustrative purposes only, and your product may slightly differ in installation, depending on specification. Please refer to your specific shower kit contents page for specification information.

These kits are designed to be used in conjunction with Bristan showers. We cannot guarantee compatability or adequate performance when used with other showers.

This shower kit must be installed in compliance with current water regulations. If you have any doubts about the water regulation requirements contact your local water services provider or use the services of a professional plumber.

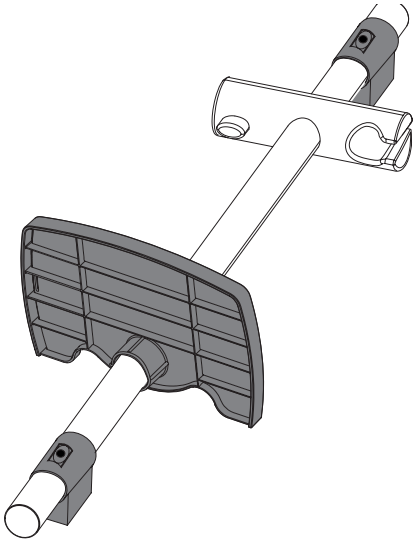

Check to see which type of brackets your adjustable riser has. This information will be needed to follow the correct installation steps.

Some of our adjustable riser kits have adjustable brackets to help cover existing fixing holes. Check to see if your brackets have a hole that goes all the way through the bracket.

You will also need to check that the riser rail has holes/notches in the rail. These holes/notches signify a fixed point where the bracket will need to be.

Bracket Types:

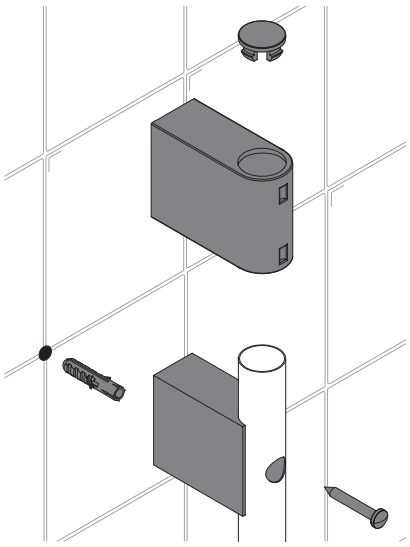

Shrouded Bracket

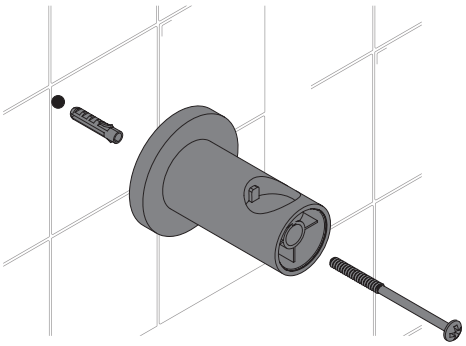

Moulded Bracket

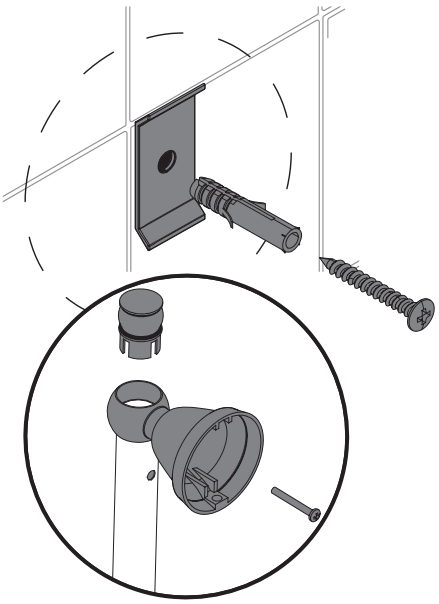

Fixing Plate Bracket

Installation - Riser with Moulded Brackets

1a

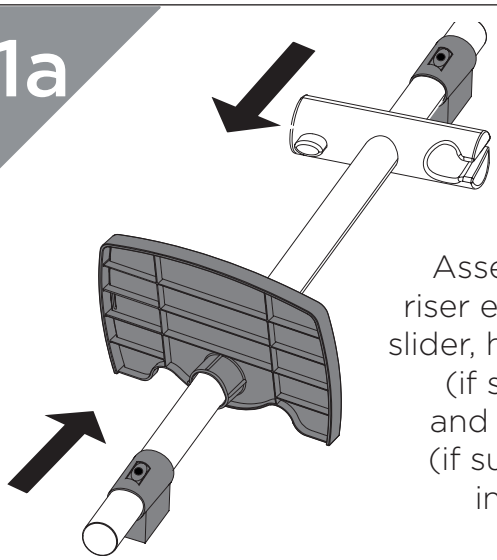

Assemble the riser ensuring the slider, hose retainer (if supplied) and soap dish (if supplied) is in place.

1b

If your brackets come with internal fixings, make sure that the internal fixings inside the bracket are in place when attaching to the riser rail.

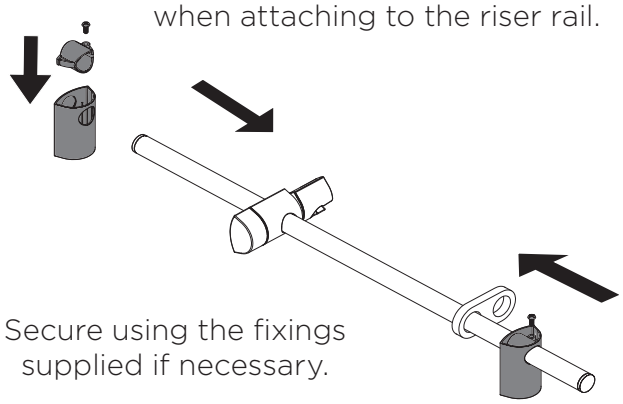

Secure using the fixings supplied if necessary.

2a

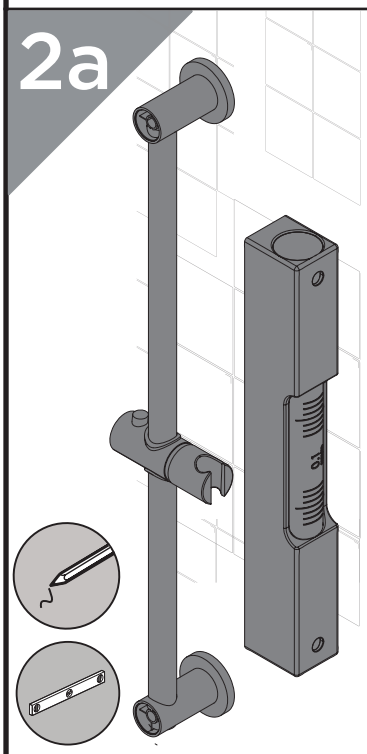

Using a spirit level to ensure the riser is positioned correctly and perpendicular to the wall, use the assembled riser to mark the desired position of the brackets and wall fixings. Make sure to accommodate for all user heights.

2b

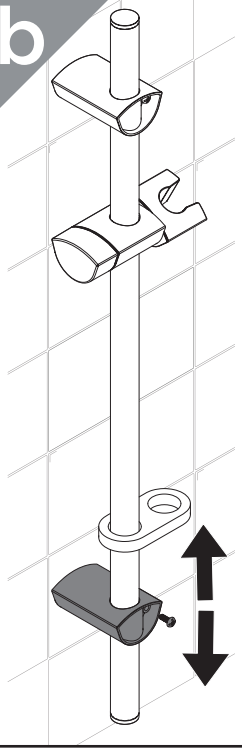

If your kit brackets are adjustable, slide the bottom bracket to the desired position to cover existing holes. If internal fixings are used in the brackets, you may need to loosen the fixings and re-tighten once in the desired position.

3

Mark and drill the screw holes. Secure the bottom bracket to the wall. Check for a notch/hole in the riser rail; fixings may have to go through the hole to secure the bracket or it may have to be orientated to fit in a certain position.

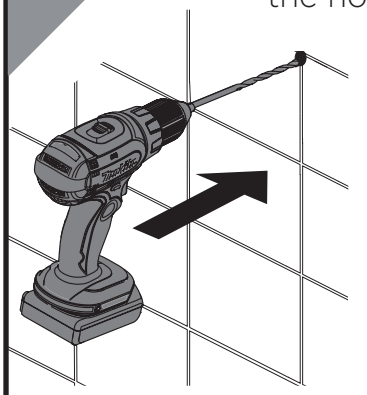

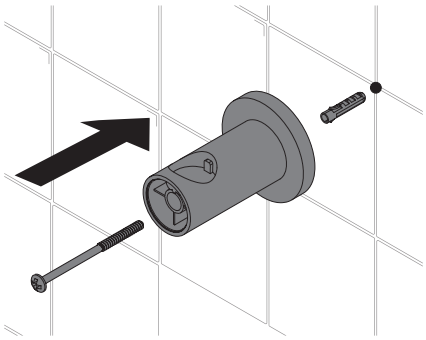

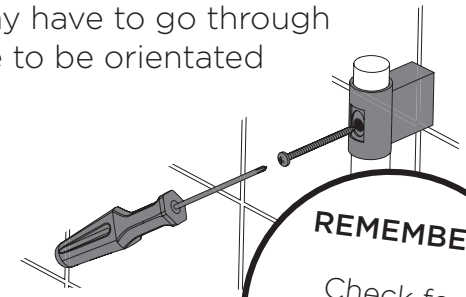

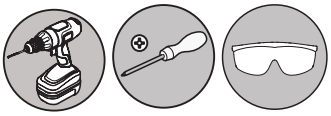

REMEMBER

Check for hidden pipes and cables before drilling!

Installation - Riser with Moulded Brackets

4

Place or slide the riser and top bracket into the bottom bracket. Secure the riser rail to the wall using the fixings supplied.

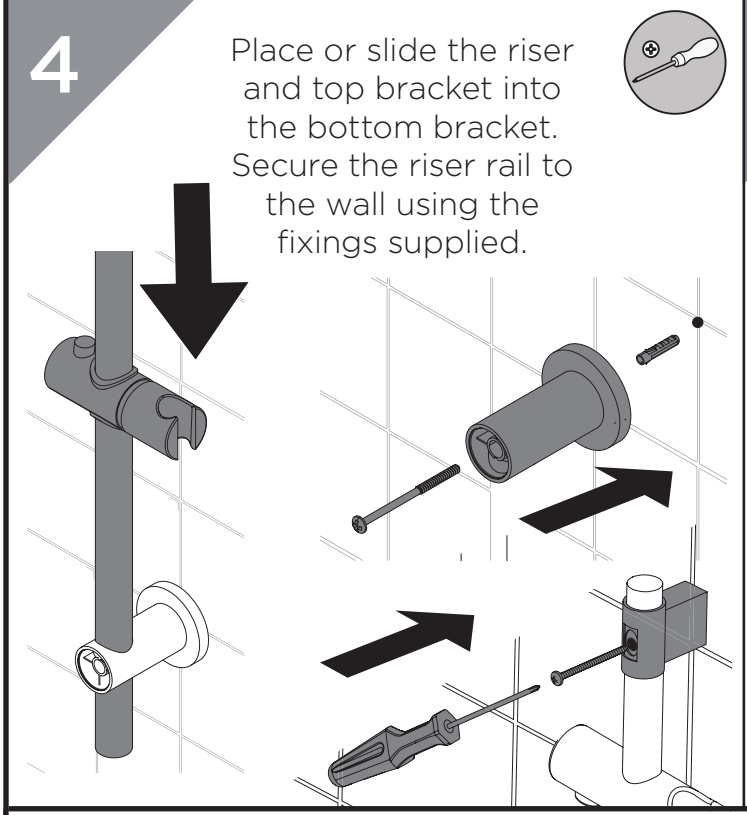

5

Place the caps on to the riser rail.

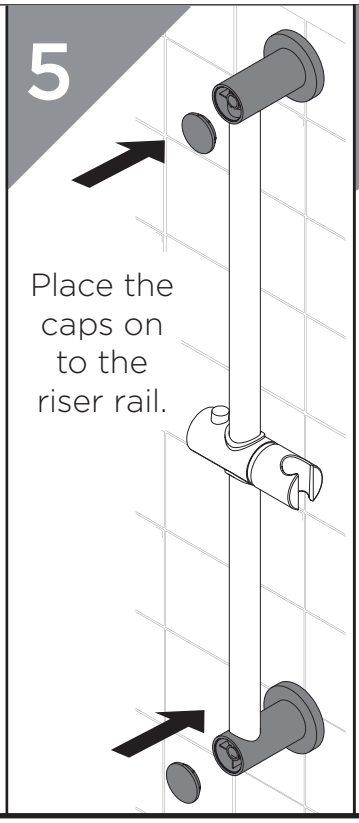

6

Connect the hose and handset to your shower, ensuring the washers are in place (if supplied). If a hose retainer or soap dish is supplied, make sure the hose is fed through it.

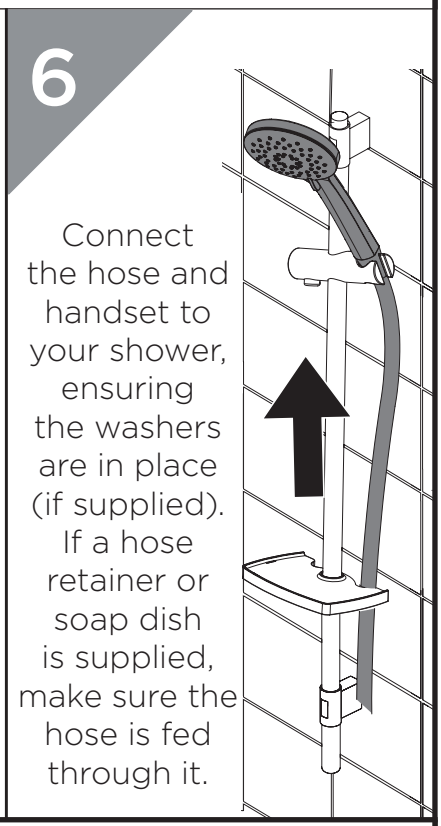

Installation - Brackets with Fixing Plates

1

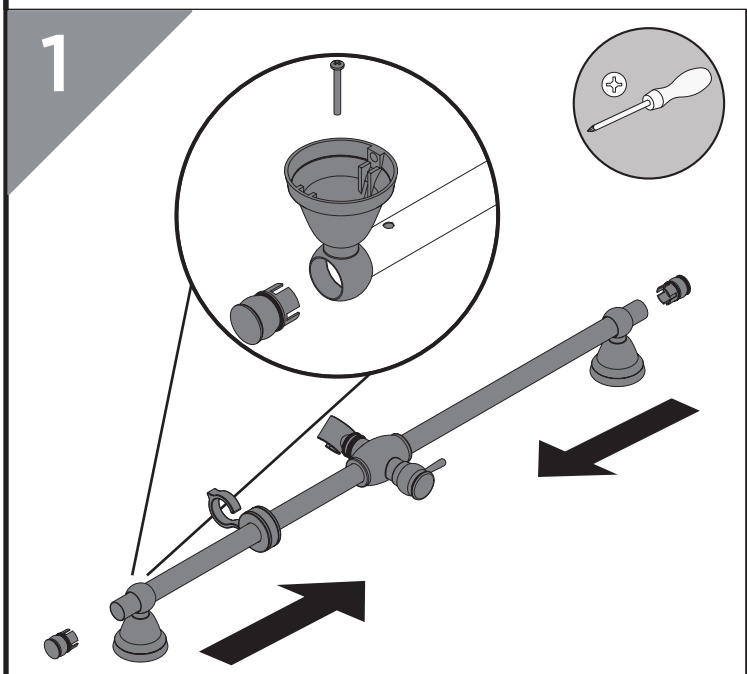

Assemble the riser ensuring the slider, hose retainer (if supplied) and soap dish (if supplied) are in place. If necessary, secure the brackets to the riser rail using the supplied fixings.

2a

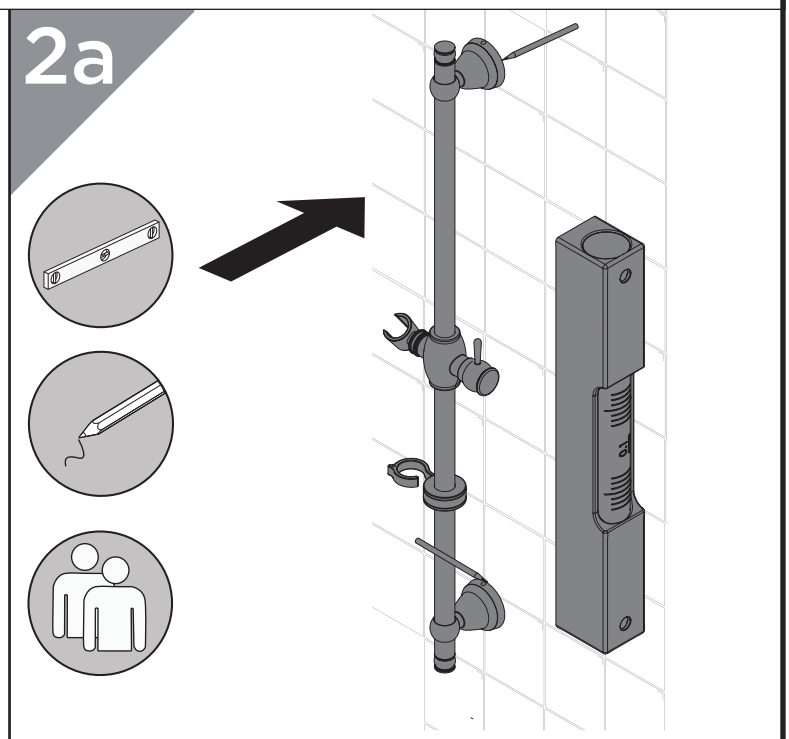

Position the riser rail, taking into account user heights and that the hose can reach the shower outlet with the handset in the holder. Check the rail is straight and mark the bracket positions.

 Need help? Give us a call on 0330 026 6273 and speak to one of our trained advisors.

Installation - Brackets with Fixing Plates

2b

If your kit brackets are adjustable, loosen the fixings to slide the bottom bracket to the desired position. Re-tighten once in the desired position. Check the rail is straight and mark the bracket positions.

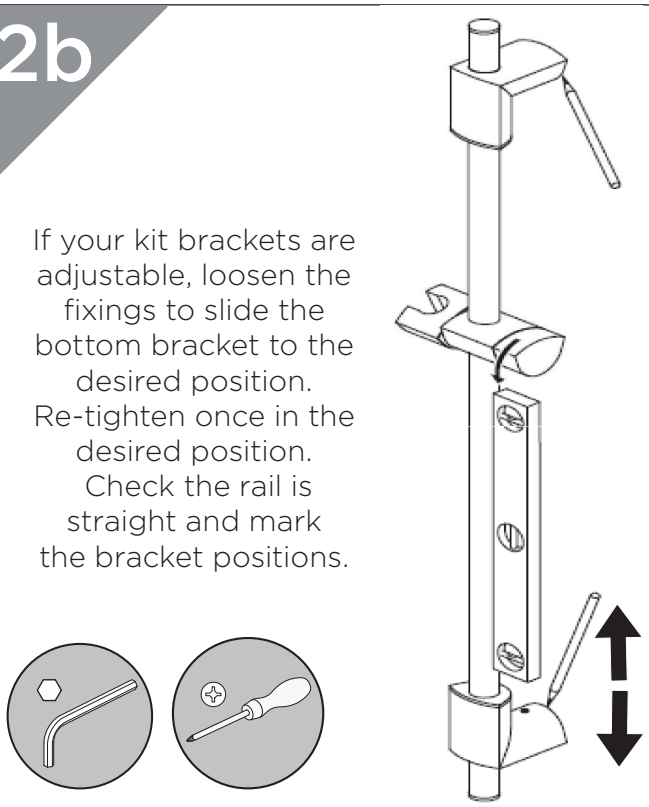

3

Remove the fixing plates by unscrewing the fixings or sliding from the fixing brackets.

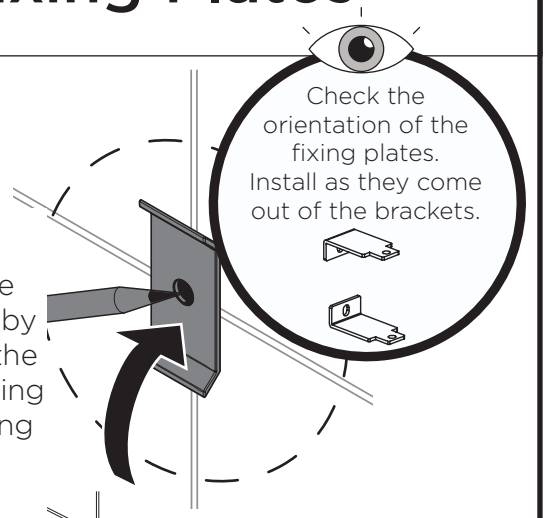

Mark the fixing holes in each bracket position and drill.

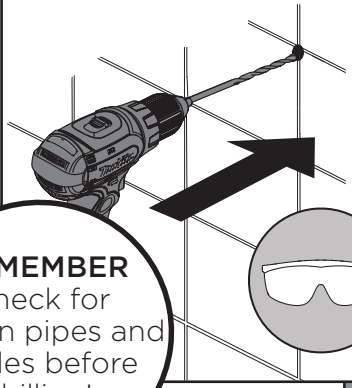

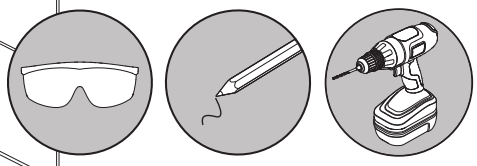

REMEMBER
Check for hidden pipes and cables before drilling!

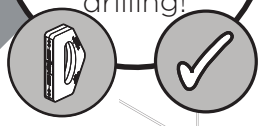

4

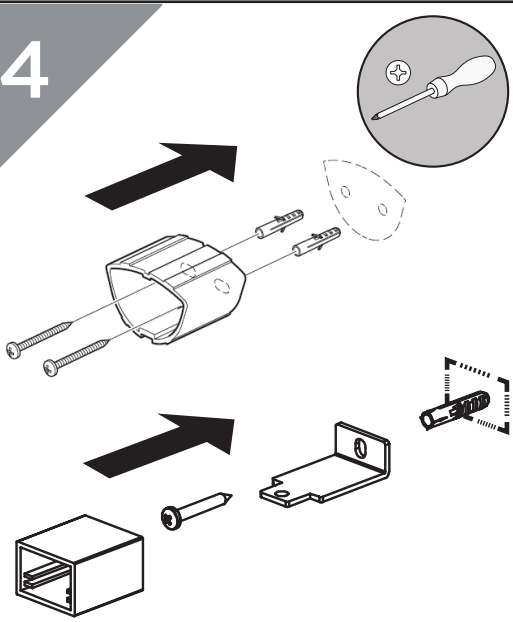

Secure the fixing plates to the wall using the fixings supplied. Use the wall plugs if necessary for your wall type. If you are fitting the riser to a partition wall or a wall of particularly soft friable substrate, you will need appropriate fixings for the wall type. If necessary, slide the bracket shrouds back on to the fixing plates.

5

Attach the riser to the fixing plates and secure using the fixings supplied. If necessary, place the caps on to the riser rail.

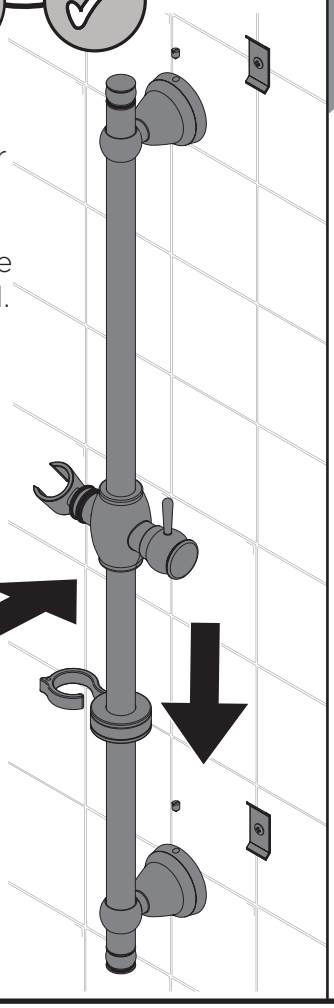

6

Connect the hose and handset to your shower, ensuring the washers are in place (if supplied). If a hose retainer or soap dish is supplied, make sure the hose is fed through it.

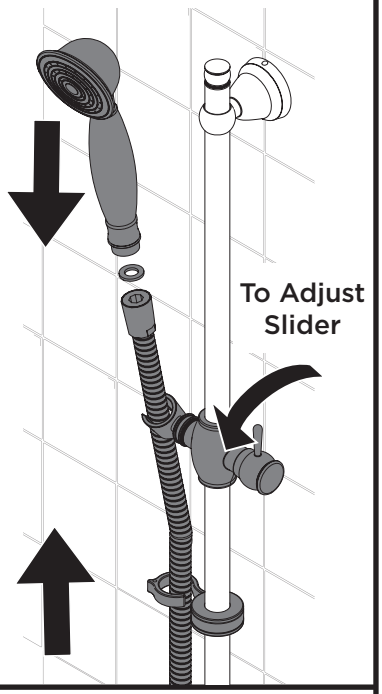

Installation - Shrouded Brackets

1

Slide the slider, bracket covers and caps on to the riser rail.

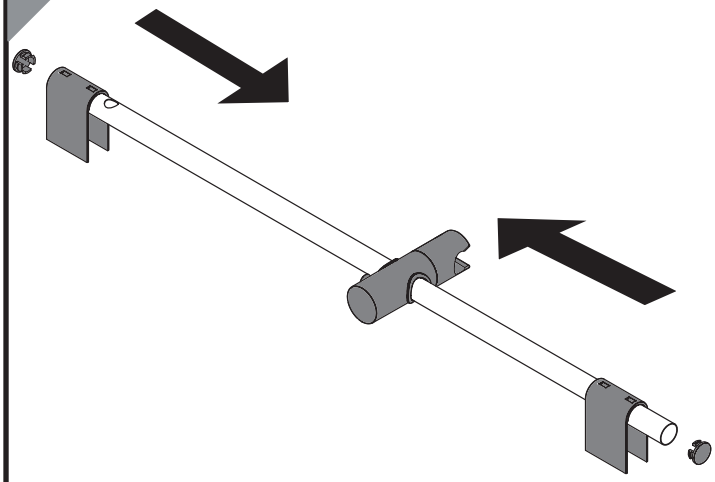

2

Ensure the riser rail is straight and mark the fixing hole positions on the wall.

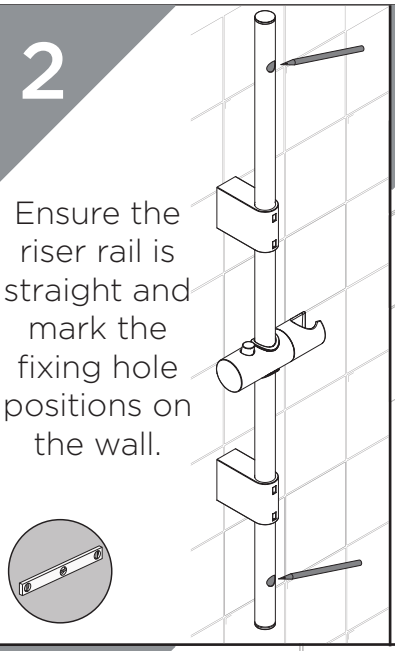

3

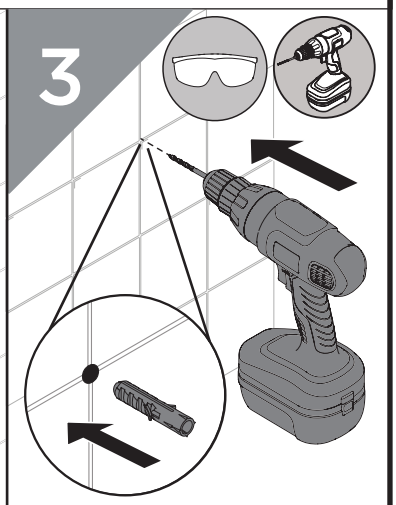

Drill the marked holes. Insert wall plugs if necessary.

4

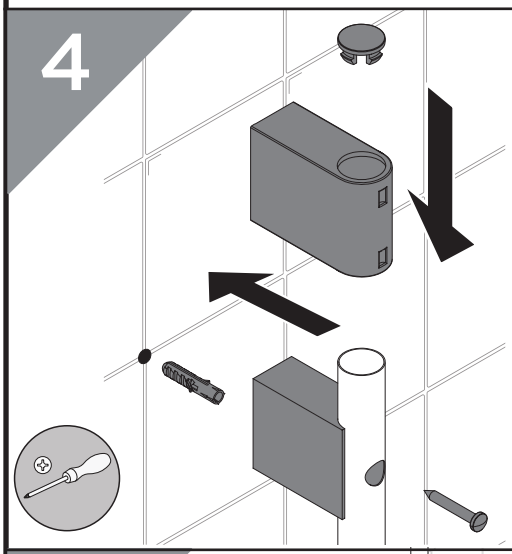

Line up the wall bracket and riser rail with the centre of the fixing hole. Screw into place and cover with the bracket cover and cap.

5

Repeat Step 4 and secure the bottom bracket into place.

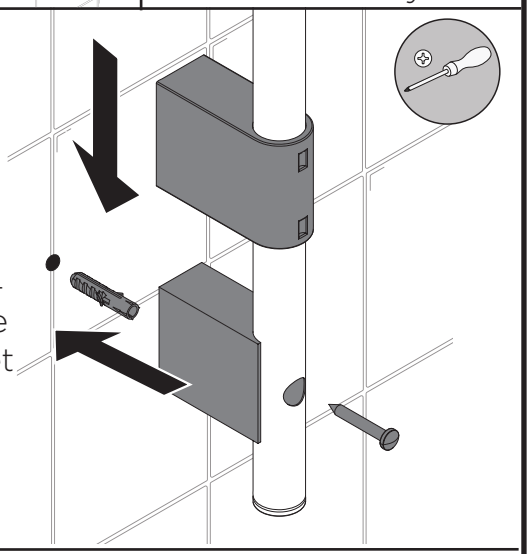

6

Connect the hose and handset to your shower, ensuring the washers are in place (if supplied). If a hose retainer or soap dish is supplied, make sure the hose is fed through it.

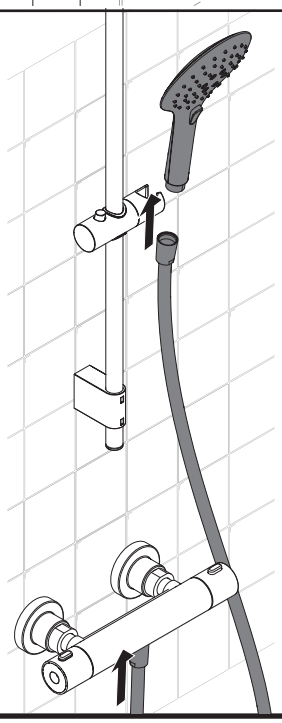

 Need help? Give us a call on 0330 026 6273 and speak to one of our trained advisors.

Installation - Wall Outlets

Choose the location for the wall outlet and create a 25-30mm hole in the wall. Ensure your hose has enough reach from that position to reach. Finish the wall surface.

With rear access

Fit the wall outlet, ensuring the washers are fitted either side of the wall. Connect the plumbing to the outlet.

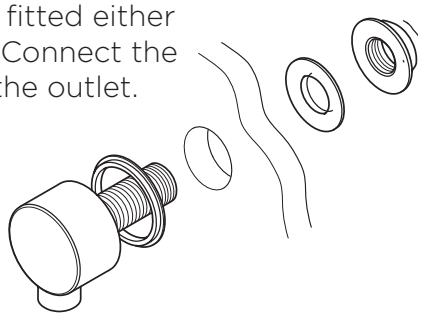

Without rear access

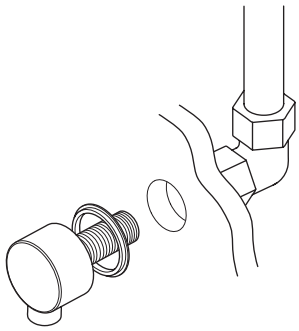

Plumb the copper pipework to the desired location. Screw the wall outlet into the 1/2" female connection, using a suitable thread sealant and ensuring the rubber seal is fitted to the back of the wall outlet.

General Cleaning

Bristan products are made from premium materials, with hand polished, PVD, EPD or electroplated finishes.

Your product should be regularly cleaned with warm water, a mild pH-neutral liquid soap, and polished with a soft cloth. Any residues from soap, toothpaste, shampoos and shower gels can cause blemishes if not rinsed off straight after use.

Household bleaches and cleaners contain harsh chemicals and may damage the surface finish. Avoid using abrasive cloths, scouring pads, scrub sponges, steel wool or anything similar.

Some surfaces such as nickel and pewter may be affected by the dye found in some cloths, so it is also important to avoid hanging cloths on surfaces.

Troubleshooting

Symptom	Cause(s)	Remedy
No flow or low flow rate	Partially closed isolation valve.	Open isolation valve.
	Head of water is below the minimum distance required.	Refer to your specific product's Contents Page for the minimum working pressure/distance required.
	Inlet filter in the shower valve is blocked	Refer to the shower fitting instructions for Maintenance steps.
	Hot or cold water being drawn off elsewhere causing pressure changes or instantaneous boiler temperature changes.	Do not use other water outlets when using the taps.
	Airlock or partial blockage in the supply pipework or hoses.	Flush through pipework to ensure removal of debris and any airlocks.
	Shower hose is kinked, causing a blockage.	Un-kink the shower hose and check for any damage, Replace if necessary.
	Water supply failure	Investigate water supply. Check your plumbing and heating systems for any faults.
Water drip-ping from shower kit	This is normal for a short time after using the shower.	This is caused by residual water tension, the build up of water in the shower kit.
	If water continues to drip, possibly due to the ceramic disc valves/ cartridge	Refer to the Maintenance section of your shower instructions to replace the valves/cartridge.

Notes

Issue: D1
Part Number: FI Adj Kits

BRISTAN

UK: Bristan Group, B78 1SG.
Customer Service: +44330 026 6273
Web: www.bristan.com
Email: enquire@bristan.com

EU: FM Mattsson AB (publ)
Box 480
SE-792 27 Mora
Sweden
Email: info@fmmattssongroup.com

At Bristan, we want to make things as easy as possible for our customers. That's why we offer solid guarantees on all our products, effective from the date of purchase, to give you peace of mind.

To start your free guarantee simply scan the QR code and register your product.
Alternatively visit **www.bristan.com/register**.

For any other queries, please call our Customer Service on **0330 026 6273** where our expert team of advisors will be able to offer you any help and advice.

For full guarantee terms and conditions visit **www.bristan.com/service-centre/guarantees**.