RS BIB C

RENAISSANCE Tap Range
Renaissance Bib Taps Chrome



Features:

- Experience smooth, reliable operation thanks to the long-life ceramic cartridge
- Up-stands and horizontal extension pipes are available separately
- Enjoy lasting brilliance with our flawless, scratch-resistant chrome finish that's salt spray tested for durability
- Built to last, backed by a lifetime parts and 1-year labour guarantee

Product Certifications:

Unified Water Label 64.4 l/min

For more products, visit our website:
http://www.bristan.com

Specification

Product Type:	Taps
Main Construction Material:	Brass
Mount Type:	Deck
Handle Type:	Lever
Connection Inlet:	1/2" BSP
Connection Outlet:	Aerator
Number of Tap Holes:	2
Valve/Cartridge Type:	1/2" Ceramic Disc Valve - 1/4 Turn
Plumbing System Requirements:	Suitable for all plumbing systems
Minimum Dynamic Pressure (bar):	0.2 bar
Maximum Dynamic Pressure (bar):	5 bar
Maximum Hot Water Temperature °C:	65°C
Maximum Static Pressure (bar):	10 bar
Isolation Included:	No

Dimensions (measurements in mm)

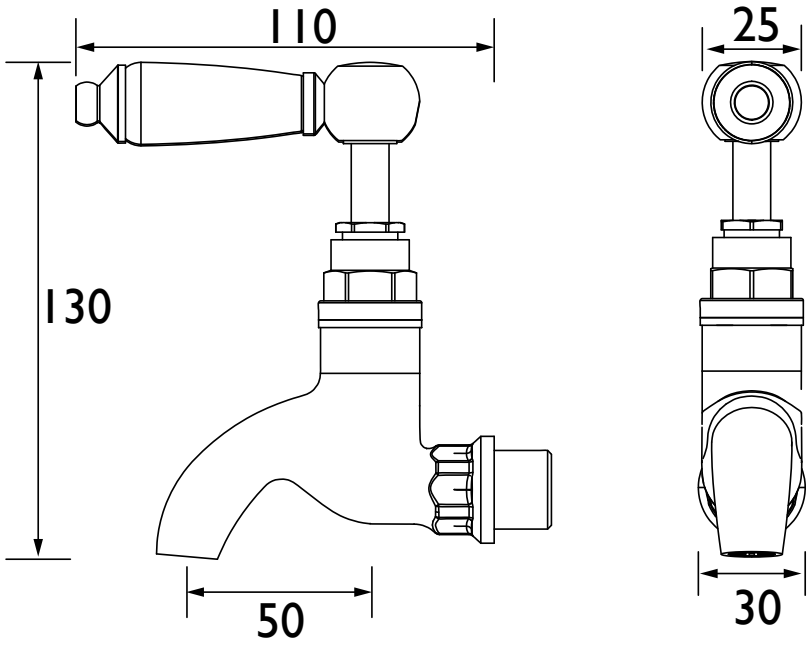

Flow Rates (l/min)

System Pressure (bar)	0.2	0.5	1	2	3	5
RS BIB C (Cold)	7.2	11.6	16.6	23.7	28.8	37.2
RS BIB C (Hot)	8.3	13.1	18.6	26.3	32.2	41.6

TECHNICAL DATA SHEET

LIFETIME GUARANTEE *

BRISTAN

D9

Bristan, Birch Coppice Business Park, Dordon, Tamworth, B78 1SG. Web Site: www.bristan.com Telephone: 0330 026 6273. Email: enquire@bristan.com.

* - **Lifetime guarantee applies to products purchased on or after 01/04/2026.** See www.bristan.com/guarantees for more information. The information contained on this page was correct at date of issue. Listed flow rates are indicative for the product. Different plumbing systems and flow regulators can produce higher or lower results. Fitting Dimensions are provided as a guide only. Some variation may occur due to manufacturing tolerances. Bristan pursues a policy of continuous improvement in design and performance of its products and so reserves the right to change specifications without prior notice.