AL 2TH WMBAS BLK

ALTUM Tap Range
Altum 2 Tap Hole Wall Mounted Basin Mixer Black

Specification

Product Type:	Bathroom Taps
Main Construction Material:	Brass; ABS; Stainless Steel
Mount Type:	Wall
Handle Type:	Lever
Connection Inlet:	15mm Compression
Connection Outlet:	M18 5lpm Flow Limited Aerator
Number of Tap Holes:	2
Valve/Cartridge Type:	35mm Single Lever Cartridge
Plumbing System Requirements:	Suitable for all plumbing systems
Minimum Dynamic Pressure (bar):	0.5 bar
Maximum Dynamic Pressure (bar):	5 bar
Maximum Hot Water Temperature °C:	65°C
Maximum Static Pressure (bar):	10 bar
Flow Type:	Single
Isolation Included:	No

Features:

- Save water without compromising performance thanks to the built-in 5L flow regulator.
- Experience smooth, reliable operation thanks to the long-life ceramic disc valves
- Create a contemporary, minimalist look with the bold matt black finish
- Built to last, backed by a lifetime parts and 1-year labour guarantee
- Find your perfect match with other finish options available

Product Certifications:

WRAS APPROVED PRODUCT

WRAS Certificate No: 250803305
WRAS Expiry Date: 31/08/2030

Unified Water Label 4.6 l/min

For more products, visit our website:
http://www.bristan.com

Dimensions (measurements in mm)

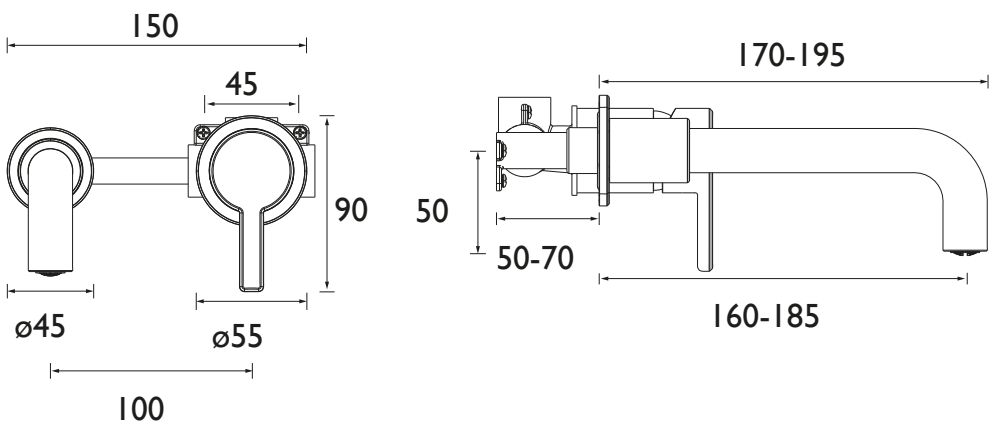

Flow Rates (l/min)

System Pressure (bar)	0.5	0.5	1	2	3	5
AL 2TH WMBAS BLK (mixed)	3.1	3.1	4.1	4.6	4.6	4.7

TECHNICAL DATA SHEET

LIFETIME GUARANTEE *

BRISTAN

D3

Bristan, Birch Coppice Business Park, Dordon, Tamworth, B78 1SG. Web Site: www.bristan.com Telephone: 0330 026 6273. Email: enquire@bristan.com.

* - **Lifetime guarantee applies to products purchased on or after 01/04/2026.** See www.bristan.com/guarantees for more information. The information contained on this page was correct at date of issue. Listed flow rates are indicative for the product. Different plumbing systems and flow regulators can produce higher or lower results. Fitting Dimensions are provided as a guide only. Some variation may occur due to manufacturing tolerances. Bristan pursues a policy of continuous improvement in design and performance of its products and so reserves the right to change specifications without prior notice.