| | | | | | |
|---|---|---|---|---|---|
| x14 | x14 | Ø8x30mm x10 | x4 | Ø3x12mm x8 | not included |

# FPCPBTWDW

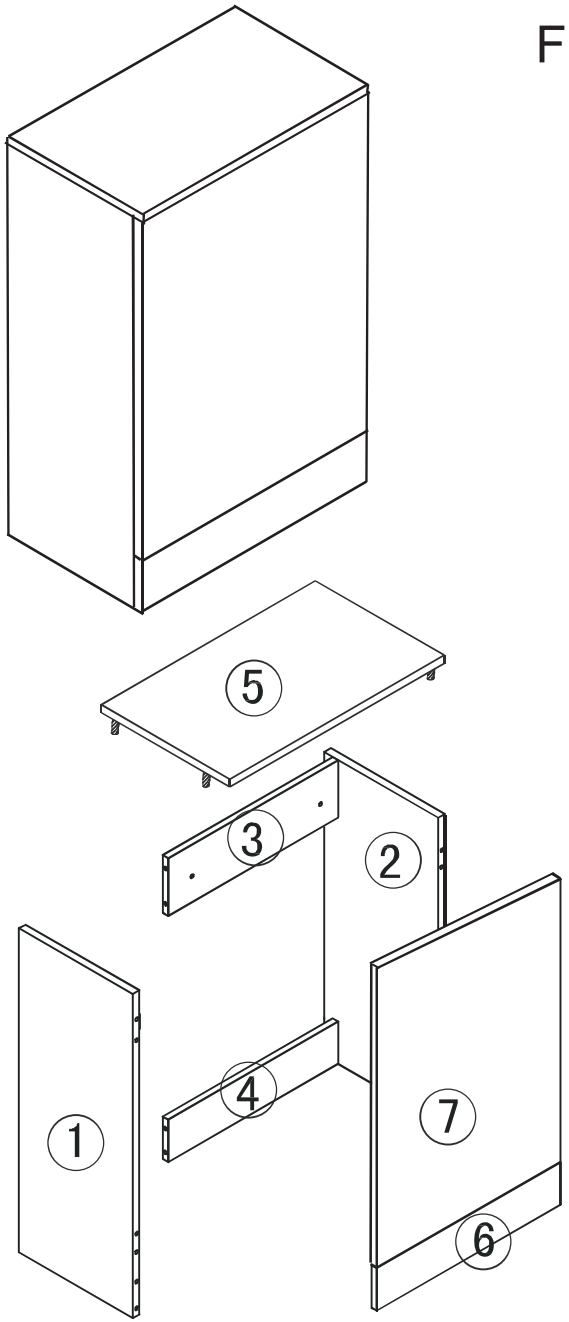


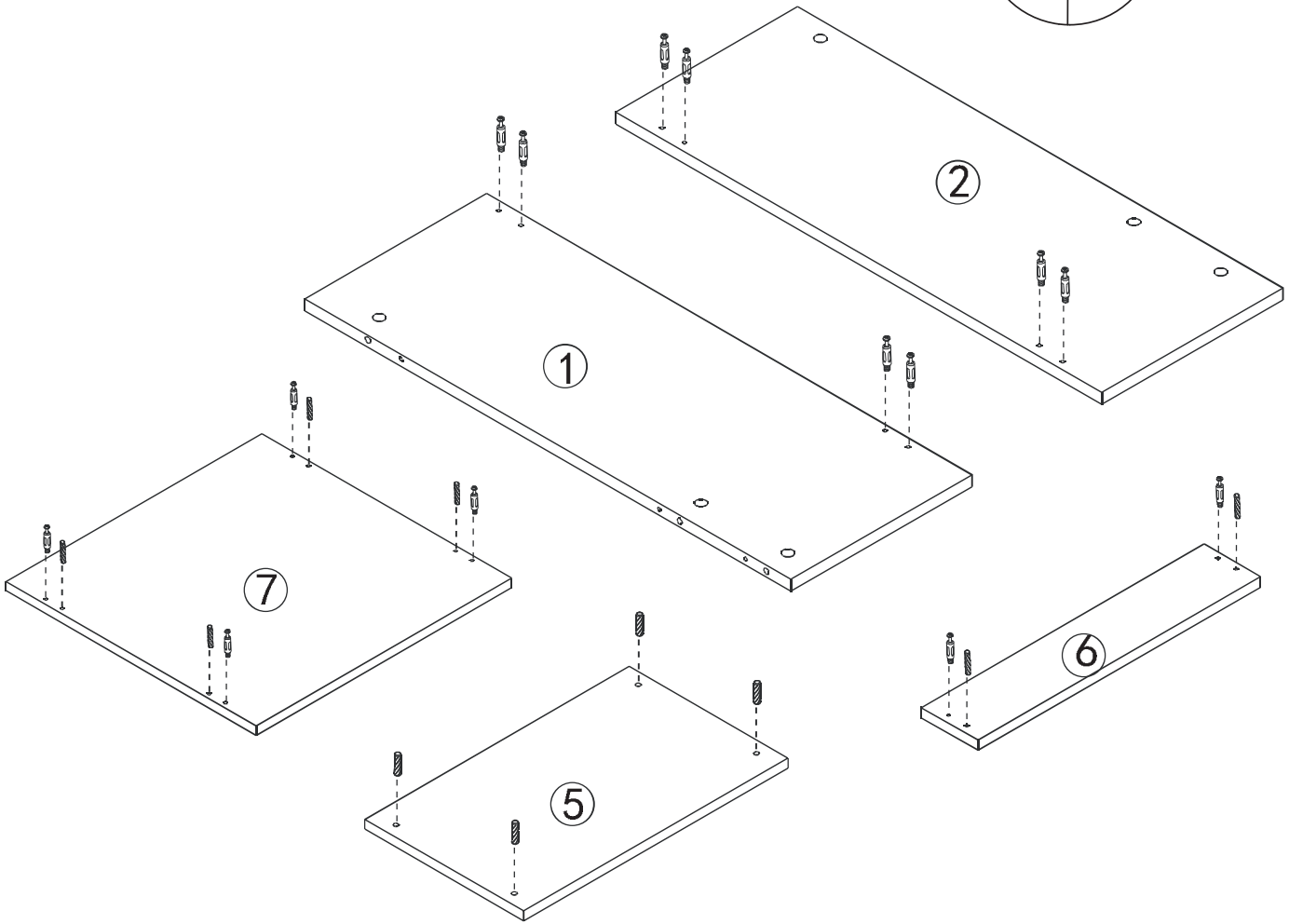


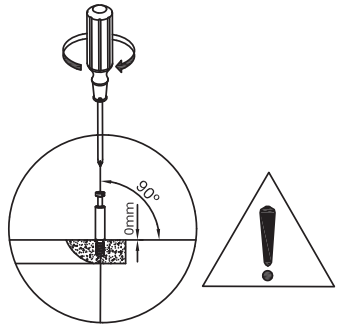

1

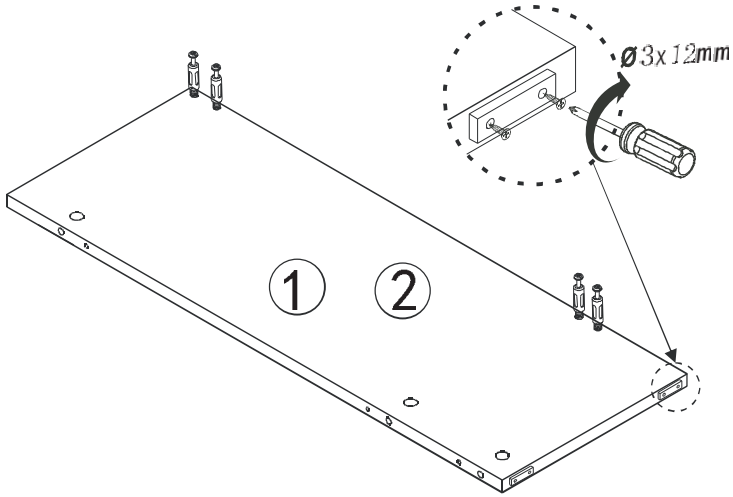


2

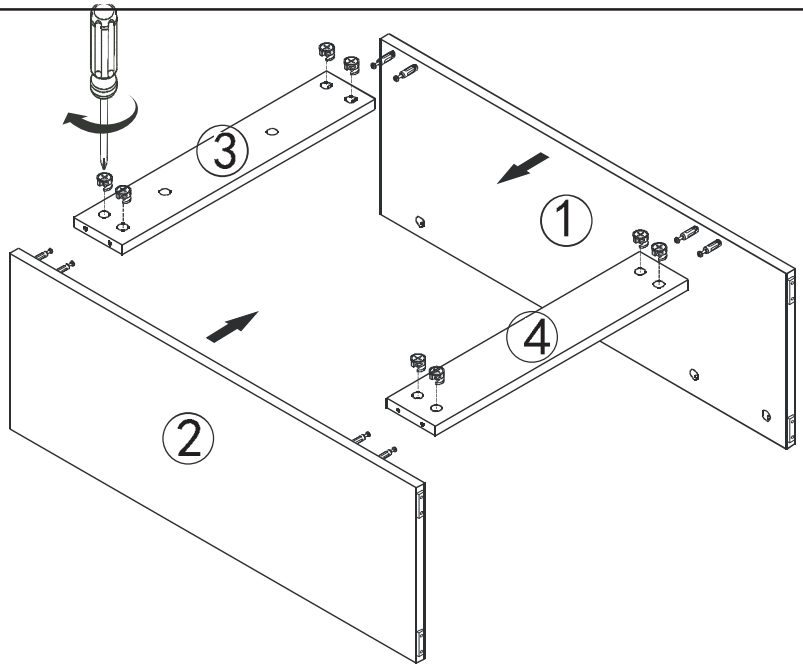


3

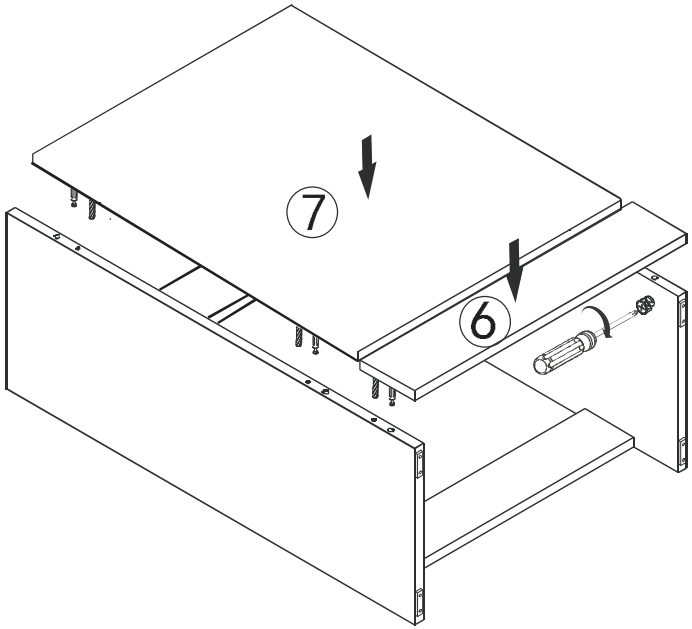


4