AN

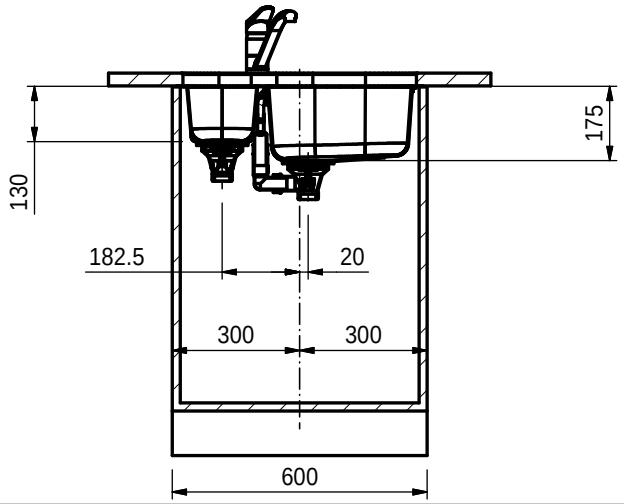

SS

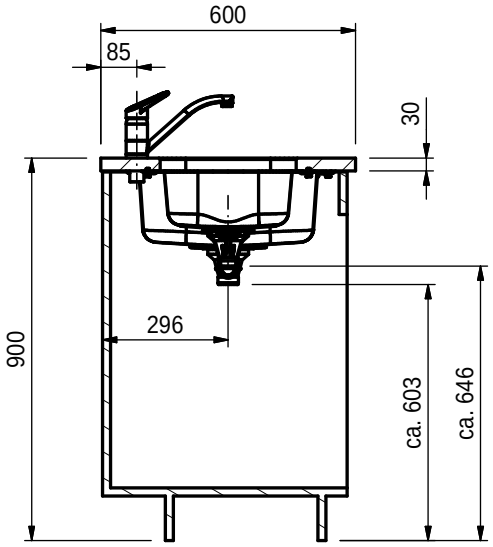

AU

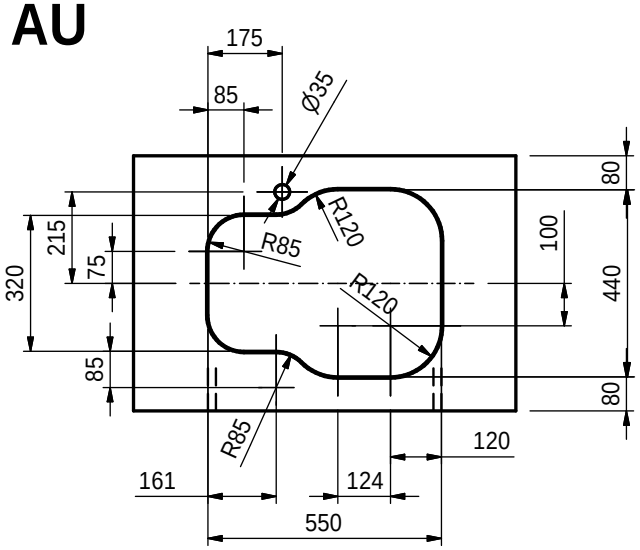

PL

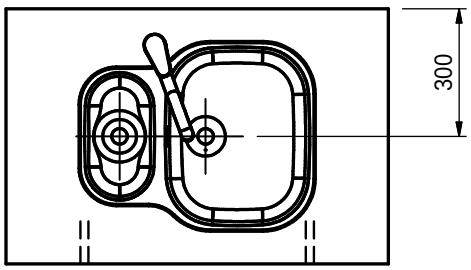

DS

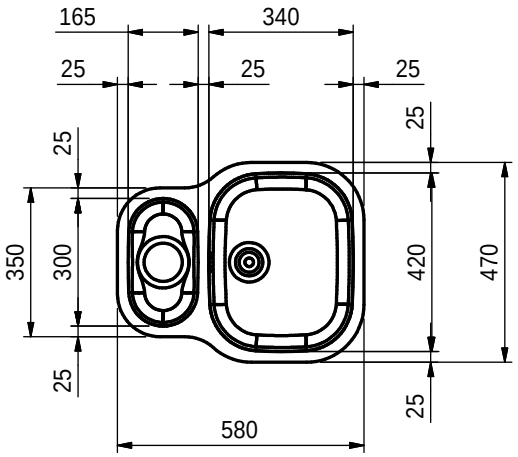

3D

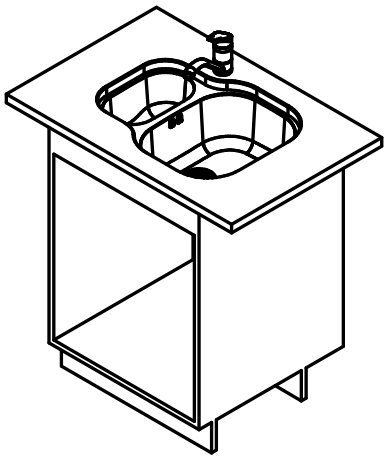

Department	Entwicklung	
Project	CP	
Collection	CPX 160 UK	
Drawn by	SP037	06.03.2007

These drawings and specifications are the property of NIRO-Plan AG and shall not be reproduced, copied or transferred to any third party without the prior written permission of NIRO-Plan AG, Aarburg, Switzerland

FRANKE
Franke Küchentechnik AG
CH-4663 Aarburg
Telefon: +41 62 787 31 31
Telefax: +41 62 787 30 18
E-Mail: ktch@franke.com
Internet : www.kt.franke.ch

CPX 160 UK

Verkaufsunterlagen

Format	Drawing No.	Rev.	Sheet
A4	0056-162621		1